GSY7721,5,8ACL
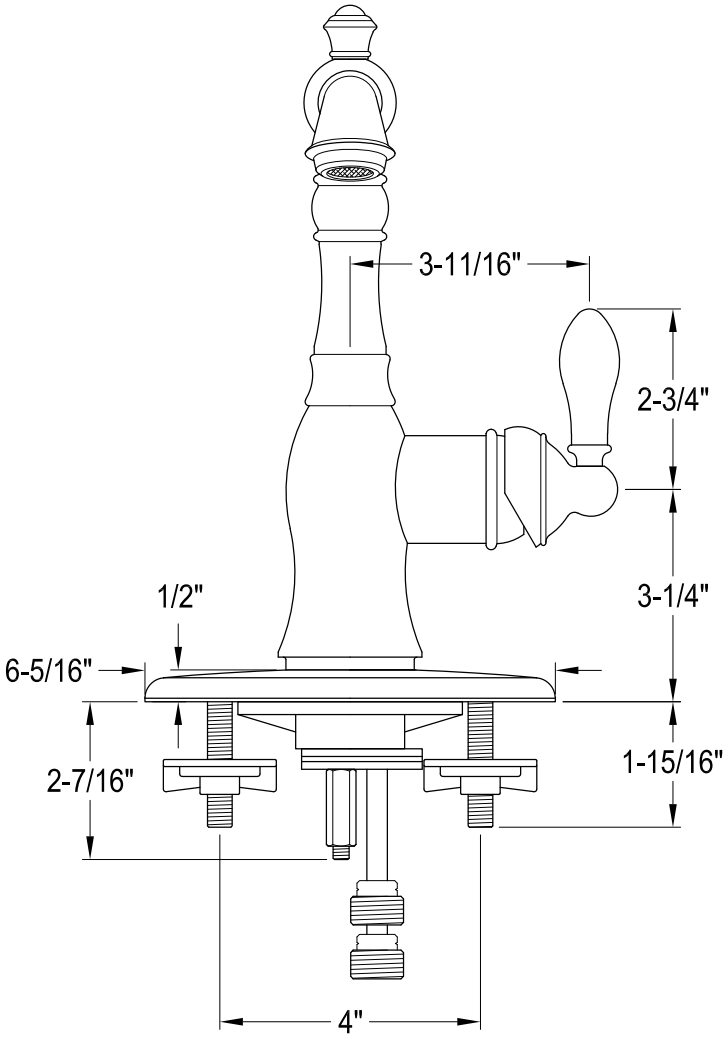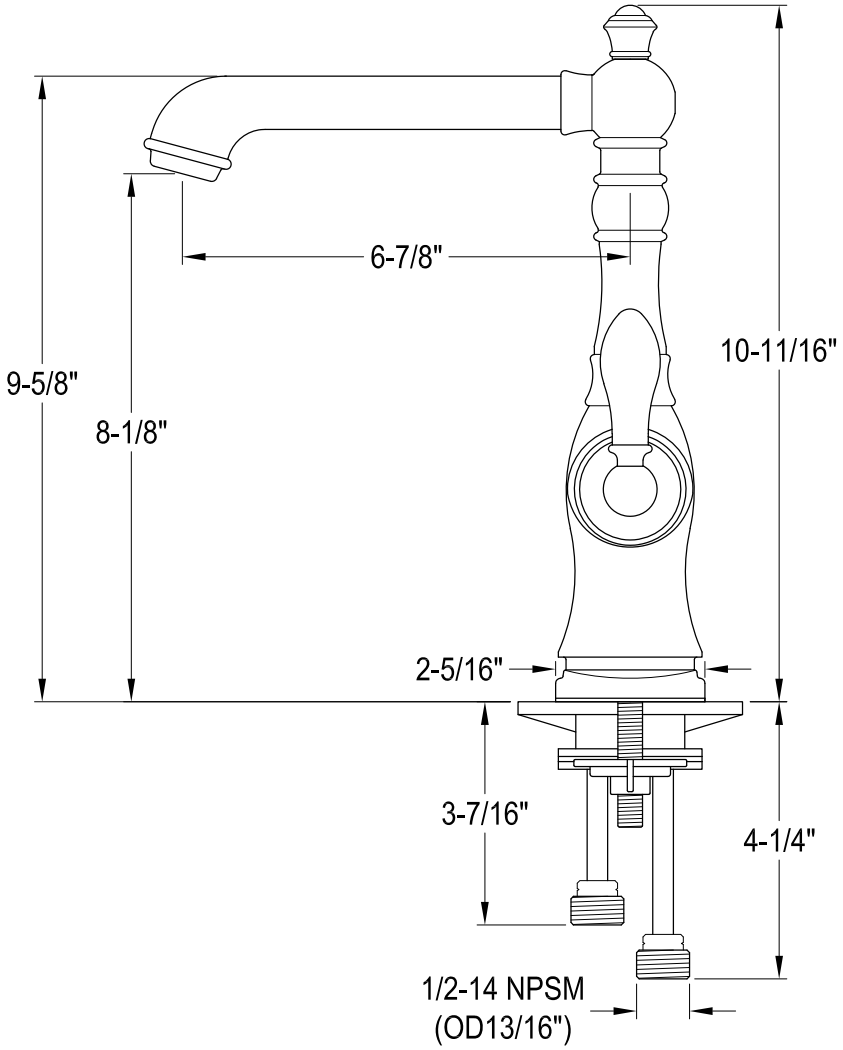
Single Handle Deck Mount Bar Faucet