KINGSTON

TO ORDER PARTS, CALL: 1-877-252-7277
www.kingstonbrass.com

VTSQ672923

66.5" Acrylic Freestanding Tub with Drain

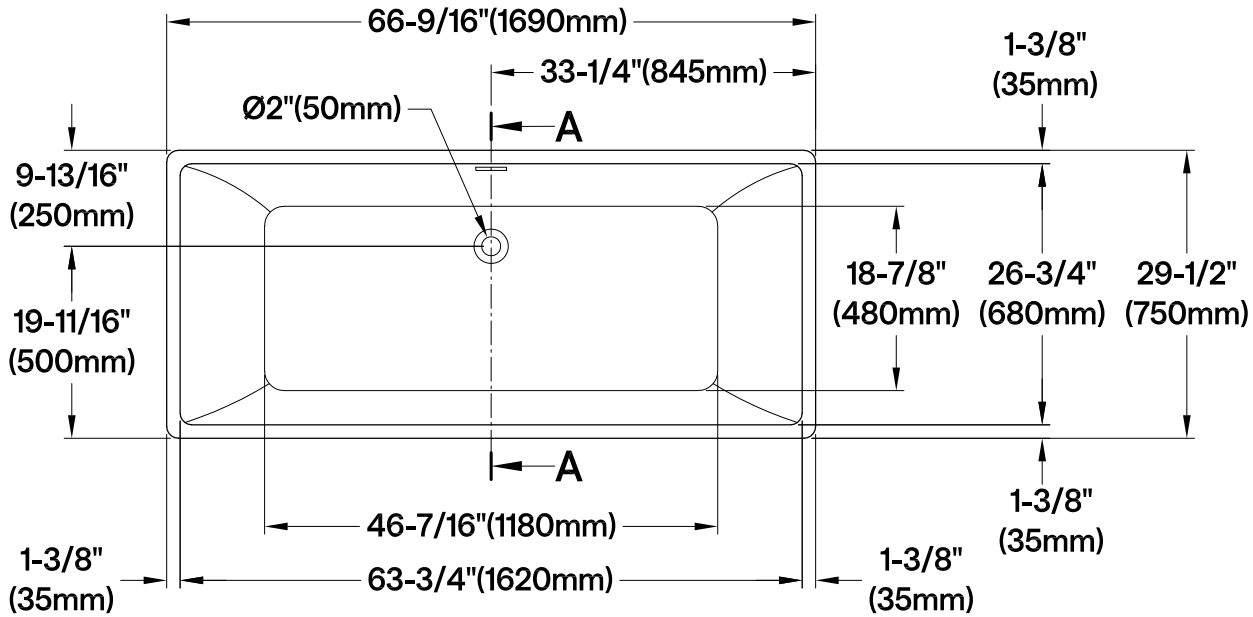

Drain Hole Size

Scale (3:1)

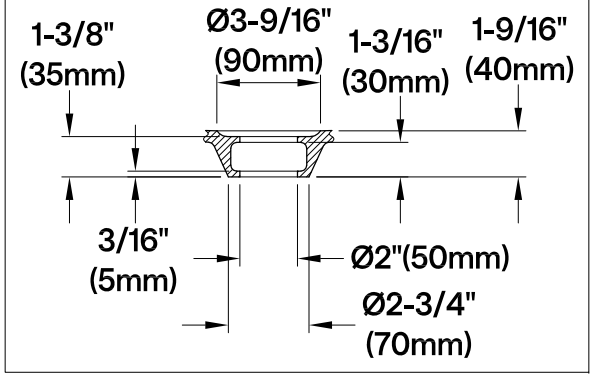

View B

Scale (5:1)

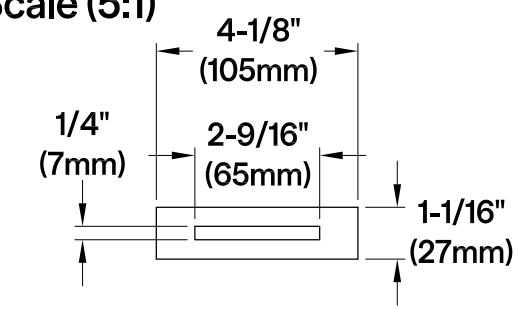

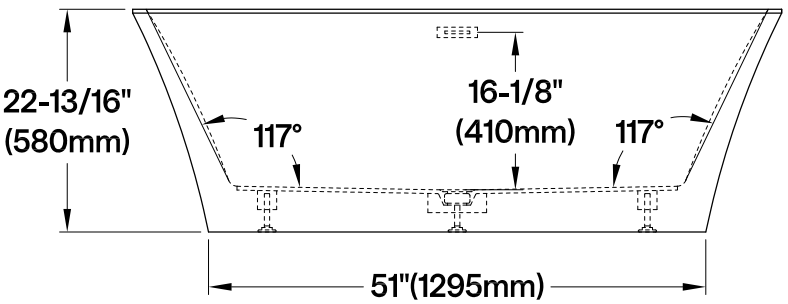

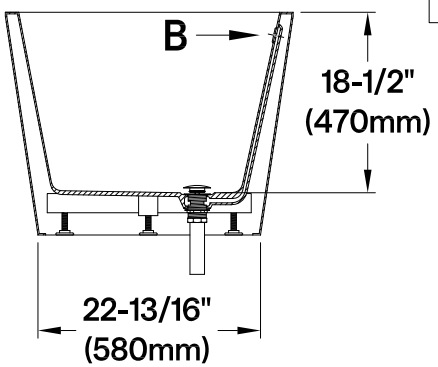

Section A-A

M14 x 100 (5 pcs)

2025-10-B