CC204T1,CC203T2,5,8
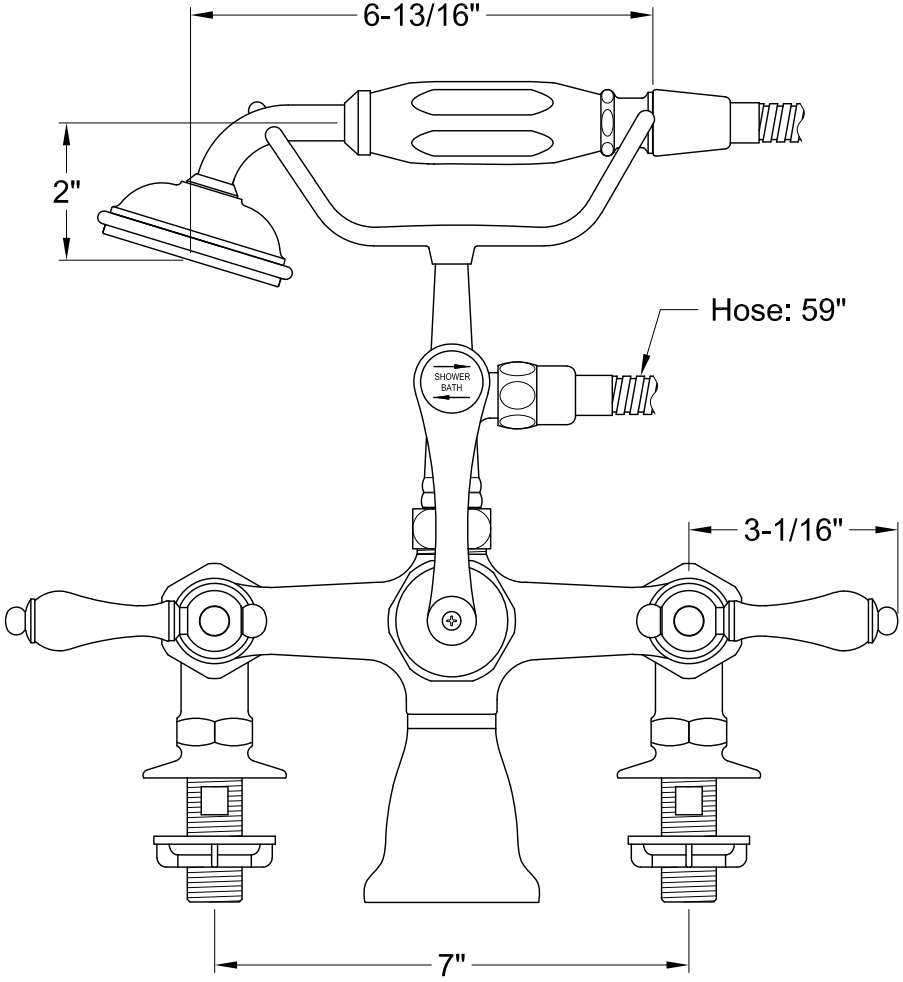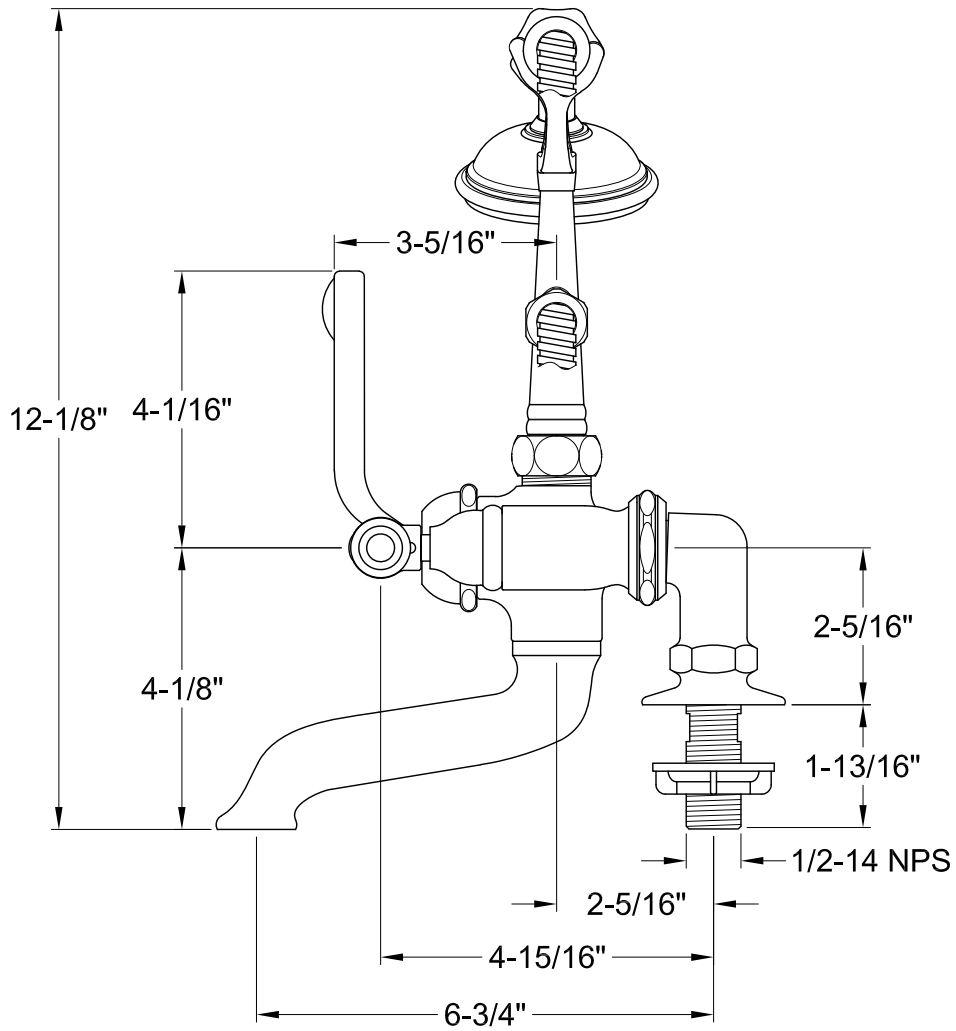
Deck Mount Tub Filler With Hand Shower