LSF8220,1,3,8DL
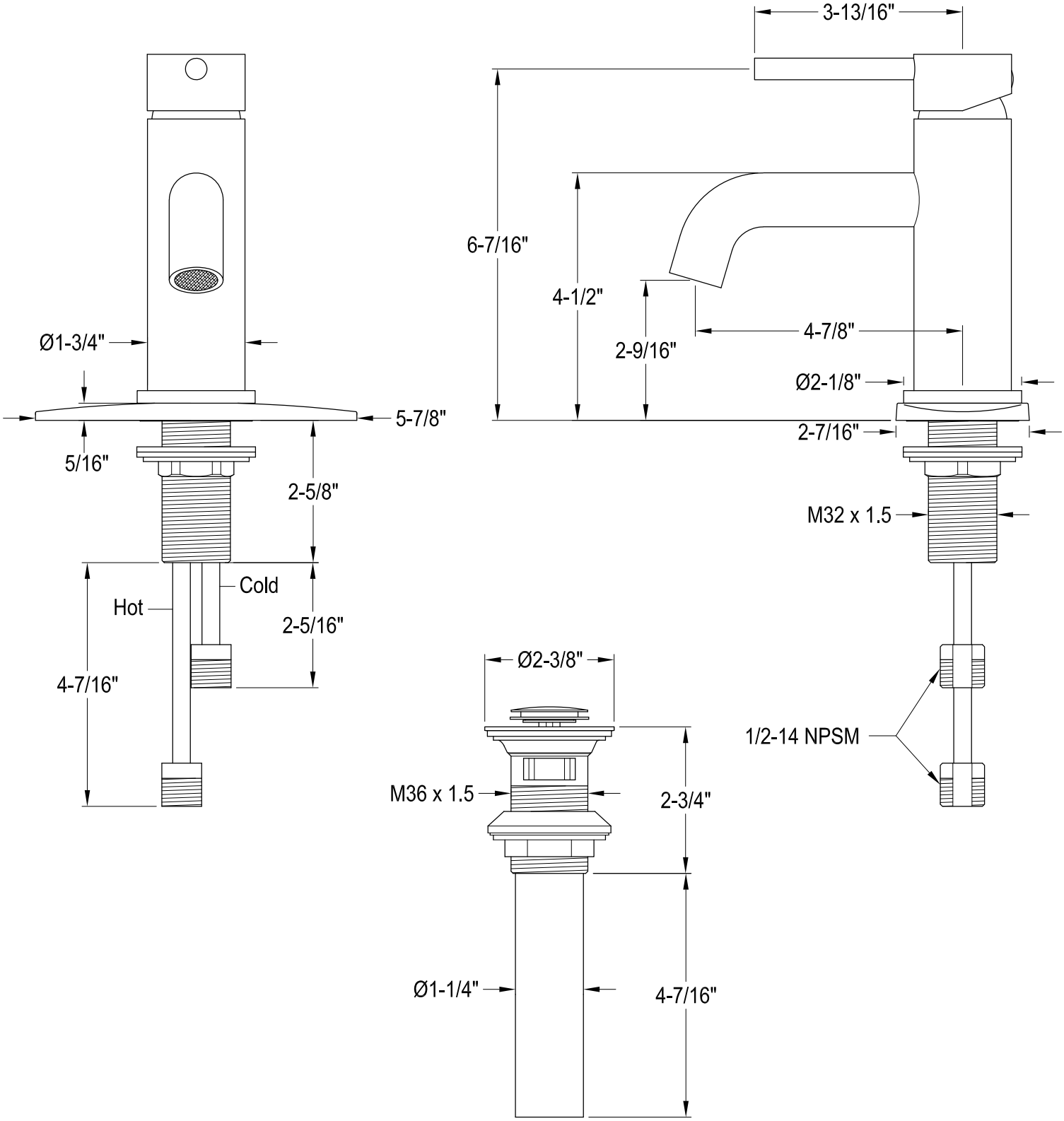
Single Handle Lavatory Faucet with Push-Up Pop-Up