DWG. NO.	360-974-0632R		
REV	DESCRIPTION	BY DATE	APPD
A	RELEASED PER NPR 2219A	10/10/20 03E	

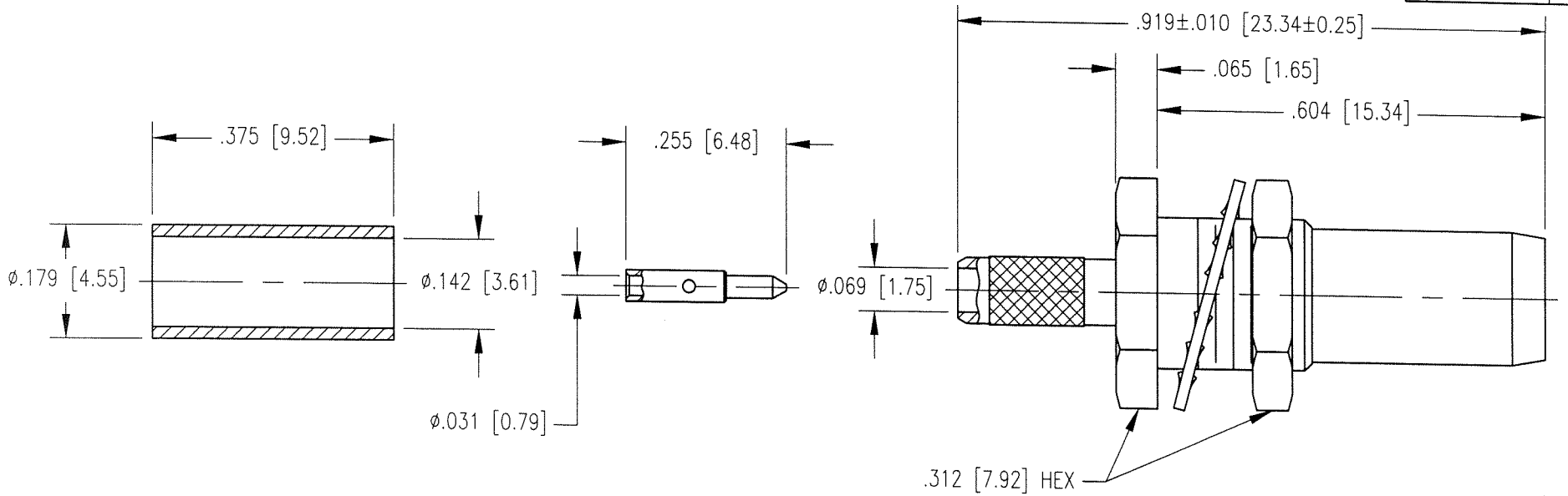

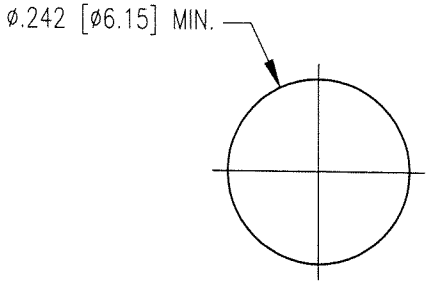

RECOMMENDED MOUNTING HOLE

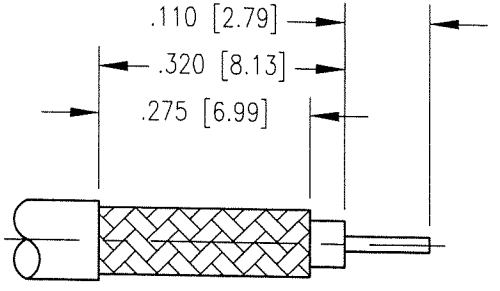

CABLE TRIMMING DIMENSIONS

NOTES:

1. MATERIALS:
   FRONT CONTACT AND FERRULE: COPPER ALLOY
   LOCKWASHER: PHOSPHOR BRONZE PER ASTM B103
   ALL OTHER METAL PARTS: BRASS PER ASTM B16
   INSULATOR: TEFLON PER ASTM D1710
2. FINISH:
   CENTER CONTACTS: .000030 MIN. GOLD PER MIL-G-45204 OVER .000050 MIN. NICKEL PER QQ-N-290
   ALL OTHER METAL PARTS: TRI-METAL PLATE
3. FOR USE WITH RG-316 CABLE OR EQUIVALENT.
4. CRIMP FERRULE USING .128 HEX DIE.

PER ASME Y14.5M-1994
UNLESS OTHERWISE SPECIFIED:
DIMENSIONS ARE IN INCHES [MM]
TOLERANCES:
DECIMALS .xx ± .01/0.254
.xxx ± .005/0.127
ANGLES ± 2°
SCALE: 4:1

Litton
Winchester/Retconn 400 Park Road Watertown, Connecticut 06795

CUSTOMER DRAWING

TITLE: BMA STRAIGHT BULKHEAD PLUG

DRAWN	DATE	CHECKED	DATE
JED	1/8/01	JEM	1/8/01
APPROVED	DATE	APPROVED	DATE
JMC	1/8/01	KJT	1/8/01

A	360-974-0632R	SHT. 1 OF 1	REV. A

June 2006 - This drawing became the property of Winchester Electronics Corporation, Wallingford, CT.