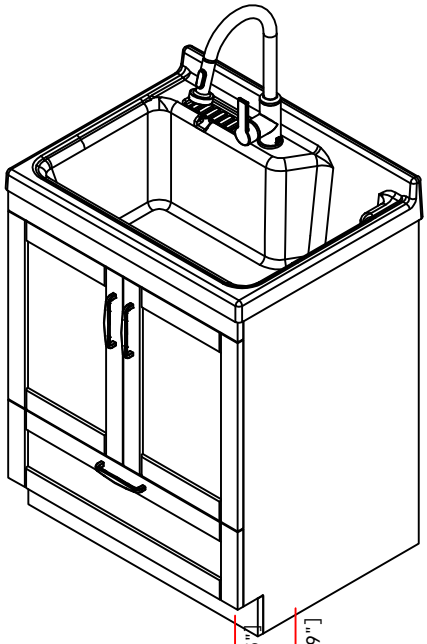

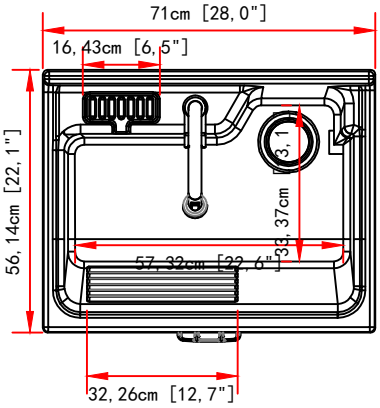

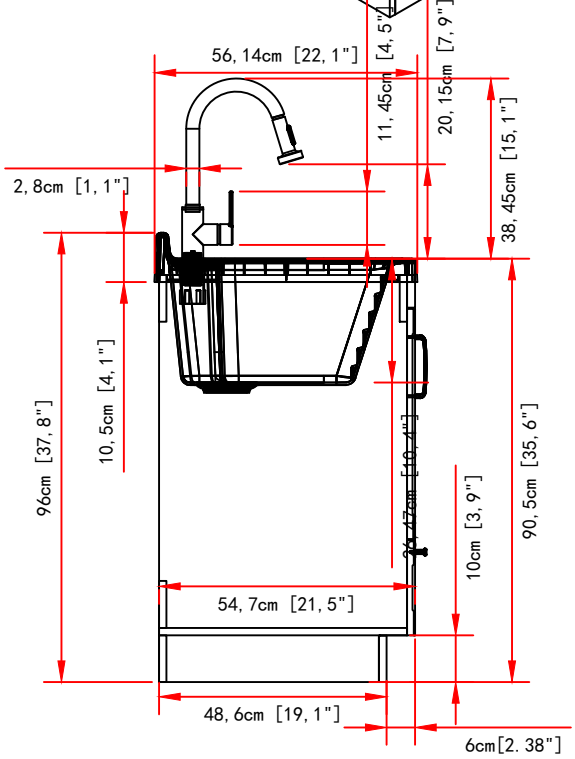

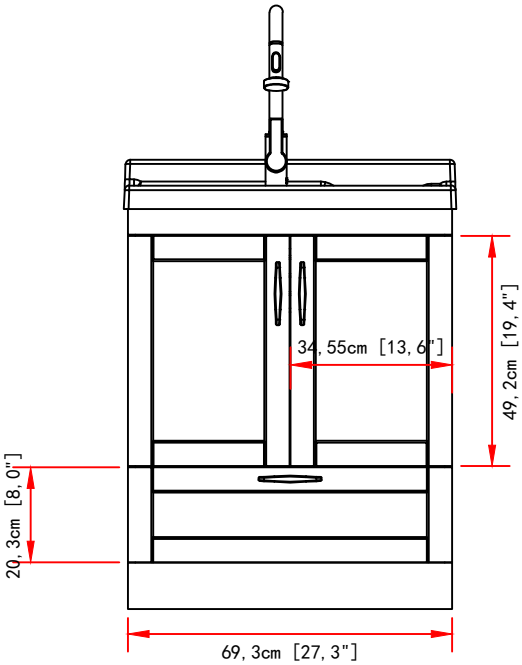

Net Weight: 103lbs