Voltaire

Drop-In Bathtub

SM-DB570

Swiss Madison®
well made forever

FEATURES:

- Easy-to-clean, high-gloss finish
- Fiberglass reinforced acrylic
- Adjustable feet
- Reversible drain

INSTALLATION:

Drop-In

COLORS & FINISHES:

☐ White: SM-DB570

INCLUDED PARTS:

- Drop-In Bathtub: SM-DB570

SPECIFICATIONS:
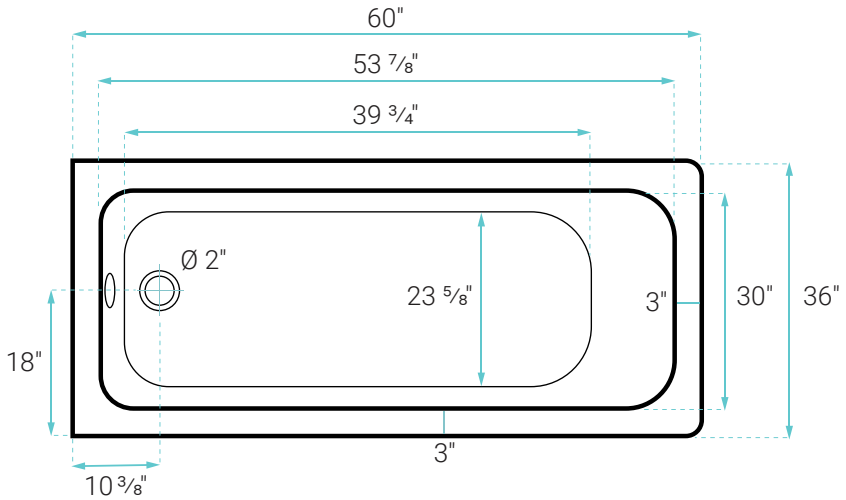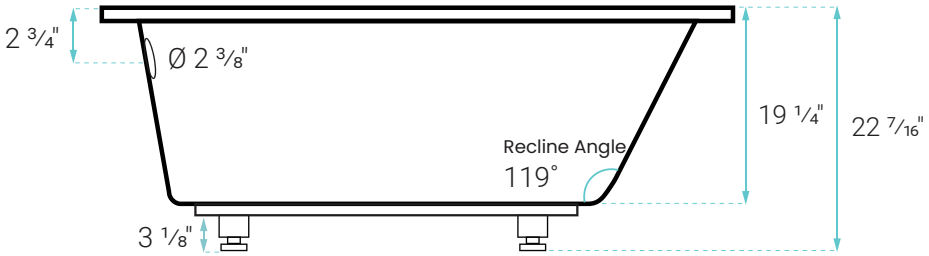
N.W: 57.0 lb.
L: 60" x W: 36" x H: 22 7/16"
Soaking Depth: 15 1/2"