Model: UCL16.5/840/BAT

IMPORTANT SAFETY INSTRUCTIONS AND INSTALLATION GUIDE

Rechargeable LED Under Cabinet Light

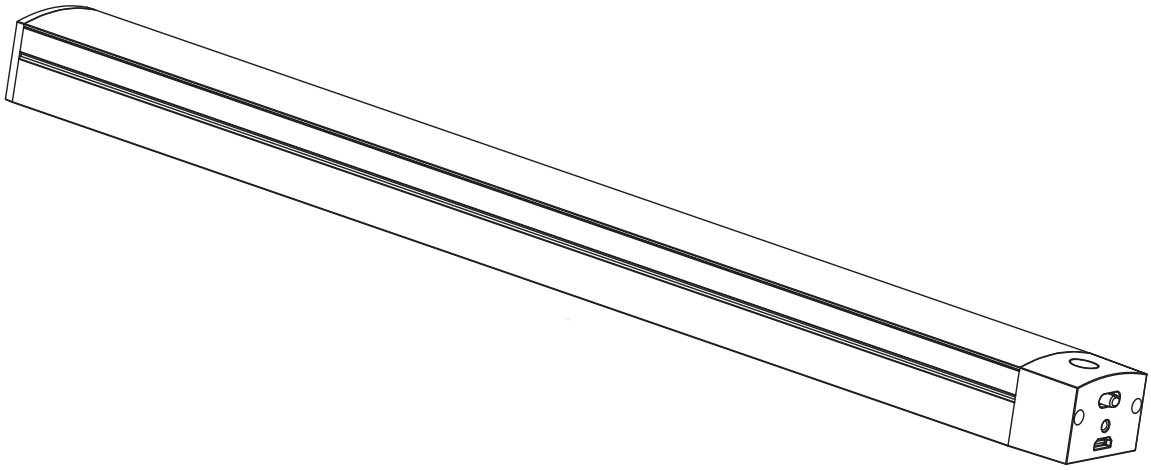

READ BEFORE INSTALLATION
SAVE THESE INSTRUCTIONS

Questions, problems, missing parts? Before returning to the store,
call Feit Electric Customer Service
8 a.m. - 5 p.m., PST, Monday - Friday

1-866-326-BULB (2852)

FEIT.COM

We appreciate the trust and confidence you have placed in Feit Electric through the purchase of this Rechargeable LED Under Cabinet Light. We strive to continually create quality products designed to enhance your home. Visit us online to see our full line of products available for your home improvement needs.
Thank you for choosing Feit Electric.

Table of Contents

Table of Contents 2
Safety Information 2
FCC Statement 2
Warranty 2
Pre-Assembly 3
Operation 4

Important Safety Information

Read and understand all Safety and Operating instructions in this manual before using this product. Follow all safe guards stated in this manual, in addition to normal safety precautions in working with electrical devices.

- Do not place near any heat source.
- To reduce the risk of electrical shock, do not put in water or other liquid. Do not place or store product where it can fall or be pulled into a tub or sink.
- Do not crush or incinerate.
- Do not insert foreign objects into this product.
- To reduce the risk of fire, keep away from combustible materials while in operation.
- To reduce the risk of injury, close supervision is necessary when this product is used near children.
- Do not attempt to repair, disassemble or modify under any circumstances.
- Check for damage prior to each use of the product.
- LED's are not replaceable.

This product uses permanent tape that may cause damage to the mounted surface. Feit Electric is not responsible for any damage to the mounted surface.

WARNING: RISK OF SHOCK. House electric current can cause painful shock or serious injury unless handled properly.

WARNING: Changes or modifications to this unit not expressly approved by the party responsible for compliance could void the user's authority to operate the equipment.

SAVE THESE INSTRUCTIONS

FCC STATEMENT

This device complies with part 15 of the FCC Rules. Operation is subject to the following two conditions:
(1) This device may not cause harmful interference, and (2) this device must accept any interference received, including interference that may cause undesired operation. Note: This equipment has been tested and found to comply with the limits for a Class B digital device, pursuant to part 15 of the FCC Rules. These limits are designed to provide reasonable protection against harmful interference in a residential installation. This equipment generates, uses and can radiate radio frequency energy and, if not installed and used in accordance with the instructions, may cause harmful interference to radio communications. However, there is no guarantee that interference will not occur in a particular installation. If this equipment does cause harmful interference to radio or television reception, which can be determined by turning the equipment off and on, the user is encouraged to try to correct the interference by one or more of the following measures: Reorient or relocate the receiving antenna. Increase the separation between the equipment and receiver. Connect the equipment into an outlet on a circuit different from that to which the receiver is connected. Consult the dealer or an experienced radio/TV technician for help. Any changes or modifications not expressly approved by the manufacturer could void the user's authority to operate the equipment.

Supplier's Declaration of Conformity:
47 CFR § 2.1077 Compliance Information
Responsible Party:
Feit Electric Company
4901 Gregg Road,
Pico Rivera, CA 90660, USA
562-463-2852
Unique Identifier:
UCL16.5/840/BAT

Limited Warranty

This product is warrantied to be free from defects in workmanship and materials for up to 1 year from date of purchase. If the product fails within the warranty period, replacement or refund is your sole remedy. Except to the extent prohibited by applicable law, any implied warranties are limited in duration to the duration of this warranty. Liability for incidental or consequential damages is hereby expressly excluded. Some states and provinces do not allow the exclusion of incidental or consequential damages, so the above limitation or exclusion may not apply to you. This warranty gives you specific legal rights, and you may also have other rights which vary from state to state or province to province.

SPECIFICATIONS

PRODUCT

USB	5V
CRI	>80
Lumens	370 lm
CCT	4000K
Life	15,000 hrs
Working Time	8.5 hours of continuous light
Charging Time	9 hrs
Operating Temperature	During Charge: 50F to 113F During Discharge: -4F to 140F

CONFIRM OPERATING TEMPERATURE

NOTE: The light will turn red when charging and turn green when fully charged.

The performance specifications (lumens, watts, life and CCT) should only be considered an approximation of expected performances.

PARTS INCLUDED

NOTE: Hardware not shown to actual size.

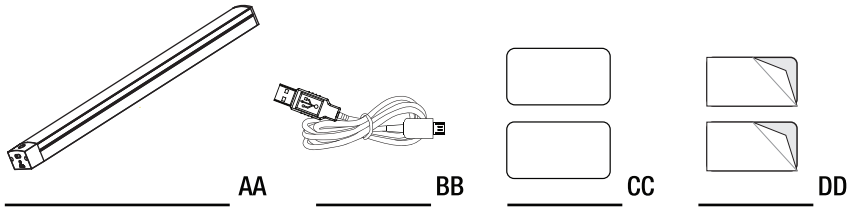

Part	Description	Quantity
AA	16.5 Inch LED Under Cabinet Light	1
BB	Micro-USB Charging Cable	1
CC	Magnetic Mounting Plates	2
DD	Double Sided Adhesive	2

LED Fixture Installation

1 Positioning the Under Cabinet Light

Find the desired place for the under cabinet light and clean the area. Remove any dirt, dust or other residue.

2 Attaching the Double Sided Adhesive

Peel off the protective film from one side of the Double Sided Adhesive (DD)

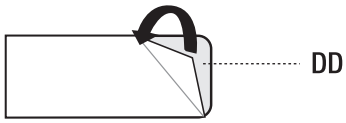

Attach one Double Sided Adhesive (DD) to each Mounting Metal Plate (CC).

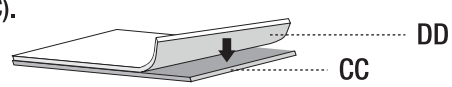

Attach the Mounting Metal Plates (CC) on the magnetic portion of the Under Cabinet Light (AA).

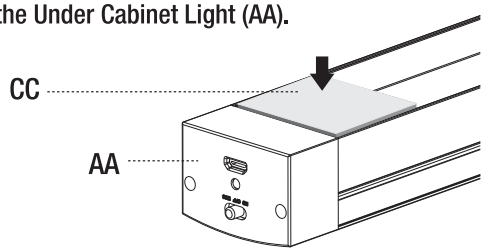

3 Installing the Under Cabinet Light

Peel off the other side of the adhesive (DD).

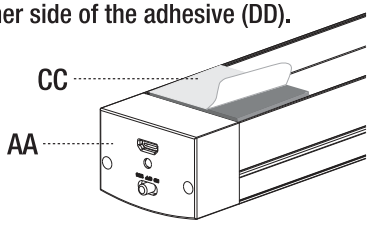

Position the Under Cabinet Light (AA) to the desired area. Press the Under Cabinet Light (AA) onto the surface and hold for 30 seconds to assure the Under Cabinet Light (AA) is held securely.

Note: After installation, the Under Cabinet Light (AA) can be removed and reattached using the built in magnet.

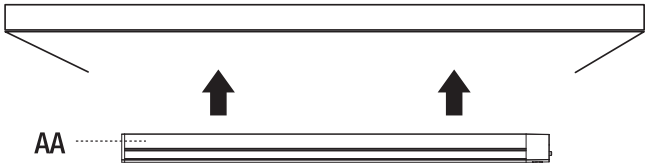

Operating Instructions

1 Selecting a Function

ON –The light will stay on and brightness will be adjustable by touching the tap control.

OFF – The light will stay off.

Timer – When the light is turned on, it will automatically turn off after 2 minutes.

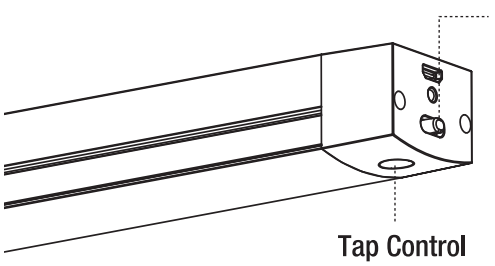

2 Charging the Under Cabinet Light
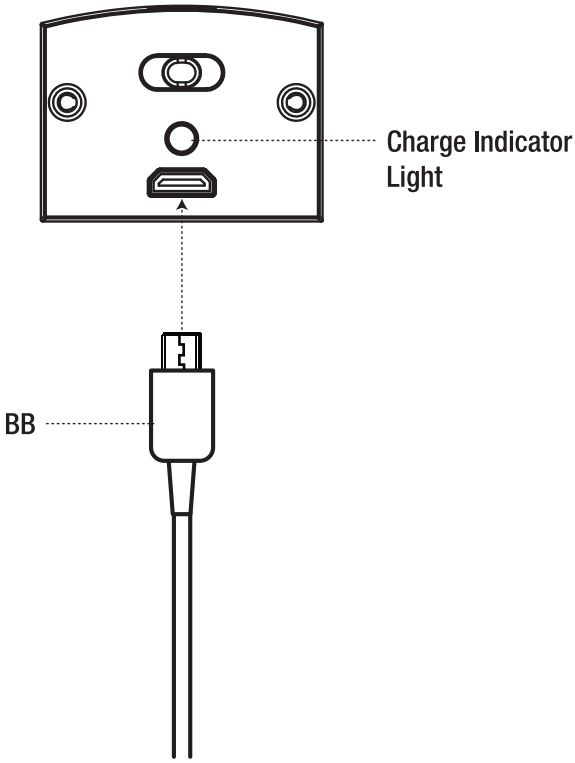
Connect the included Micro-USB Charging Cable (BB) to the charging port on the Under Cabinet Light (AA). The Charge indicator light on the Under Cabinet Light (AA) will turn red when charging and will turn green when the light is fully charged.