KSD2230,6,7RX
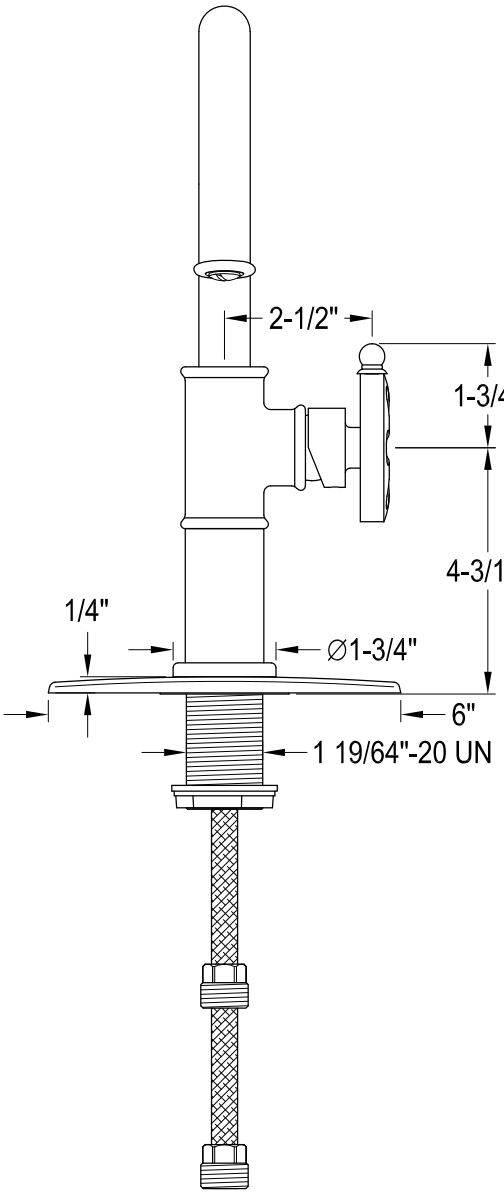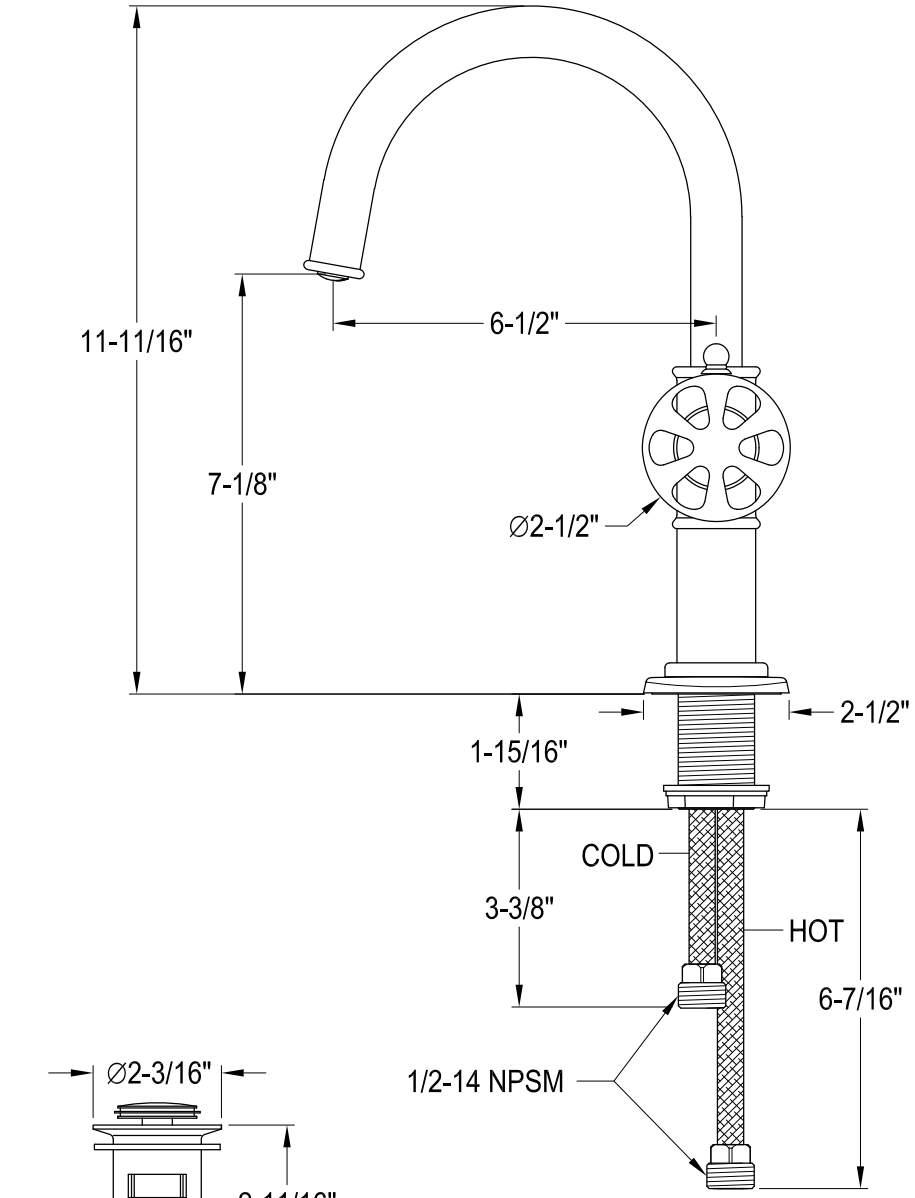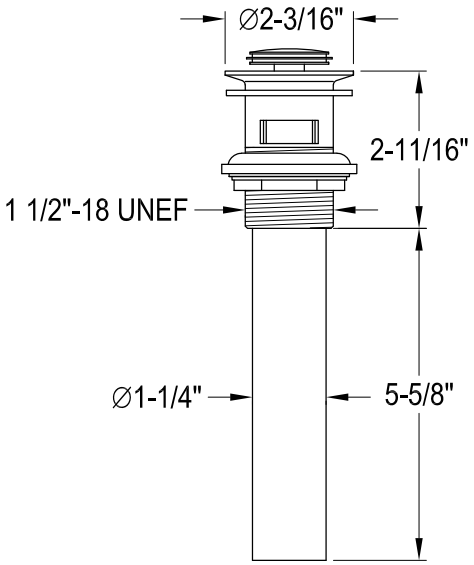
Single Handle Lavatory Faucet With Push-up Pop-Up