KS7030,1,2,5,8DKL

Floor Mount Tub Filler with Hand Shower

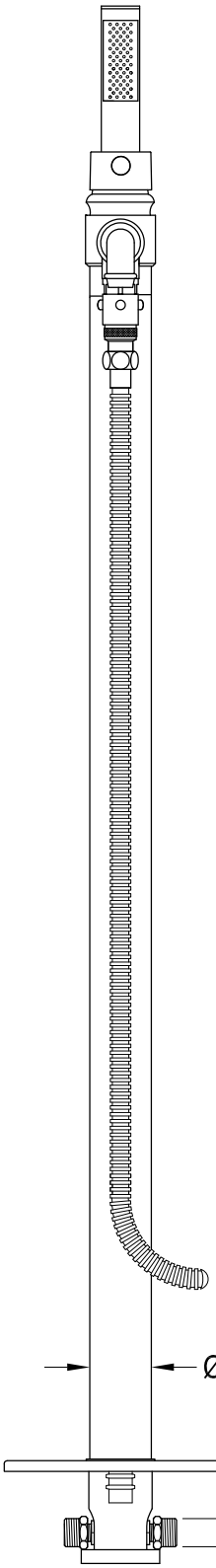

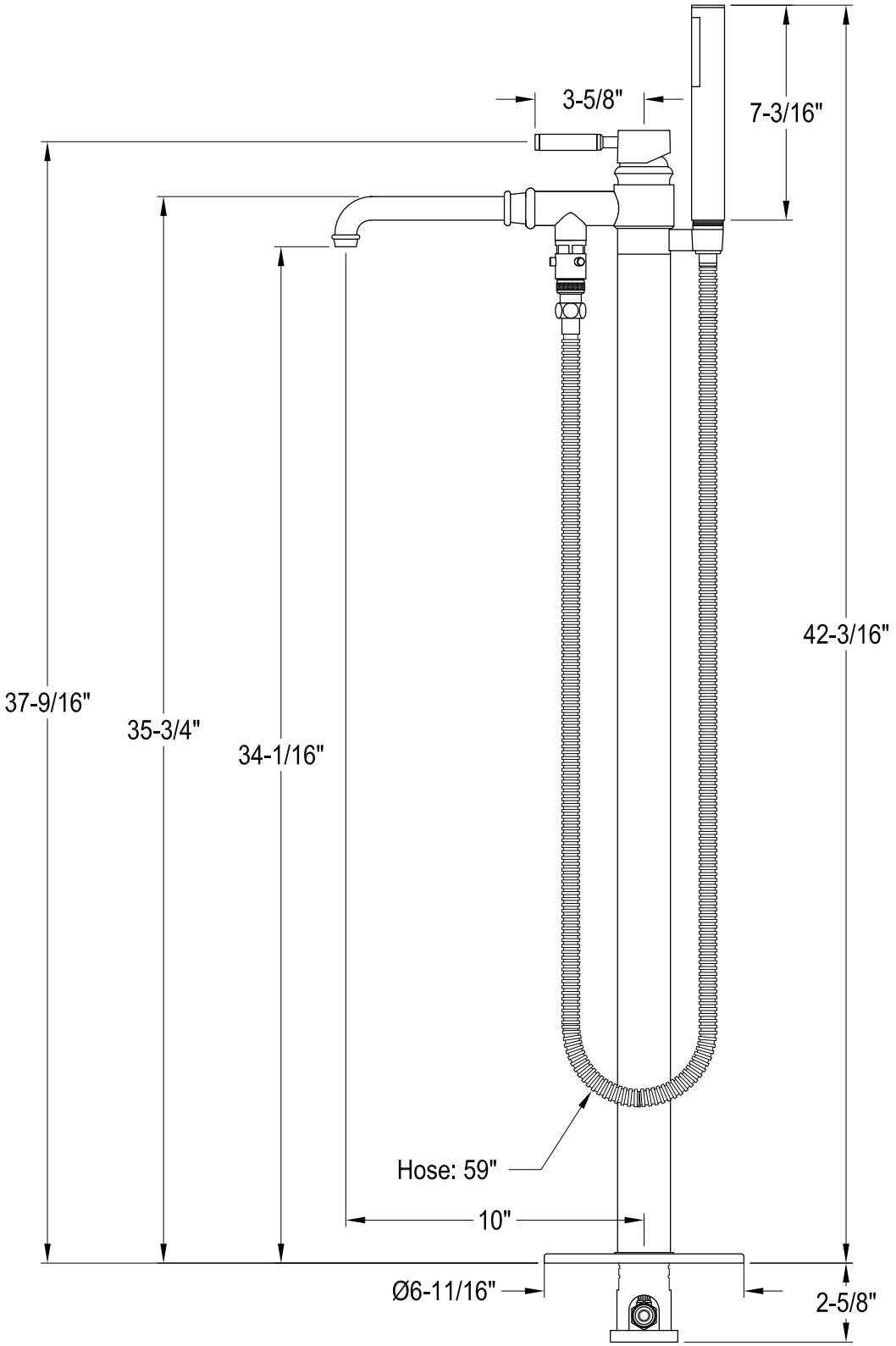

Ref# KS7030,1,2,5,8DKL | 2023-05-C