This document, including the design, configuration and mechanical features revealed herein are the sole, confidential and proprietary property of TRU Corporation. Reproduction or use thereof, in whole or part, is prohibited without the prior written consent of TRU Corporation.

REV.	DESCRIPTION	DATE	APPROVED
-	ORIGINAL ISSUE	2/18/05	WWW

ENGINEERING DATA:

ELECTRICAL:
IMPEDANCE: 50 OHMS NOMINAL
FREQUENCY RANGE: DC to 4 GHz
VOLTAGE RATING: 1,000 VOLTS RMS MAX.

MECHANICAL:
INTERFACE: C(f) PER MIL-STD-348 FIG. 302.2
HN(m) PER MIL-STD-348 FIG. 317.1

MATERIAL:
GASKET: SILICONE RUBBER
INSULATORS: PTFE (TEFLON)
CONTACT: BERYLLIUM COPPER
CONTACT FINGERS: BERYLLIUM COPPER
OTHER METAL PARTS: BRASS

FINISH:
METAL PARTS: SILVER PLATED

ENVIRONMENTAL:
TEMPERATURE RANGE: -65˚C to 165˚C

NOTES:
1. UNLESS OTHERWISE SPECIFIED; ALL DIMENSIONS ARE REFERENCE ONLY.

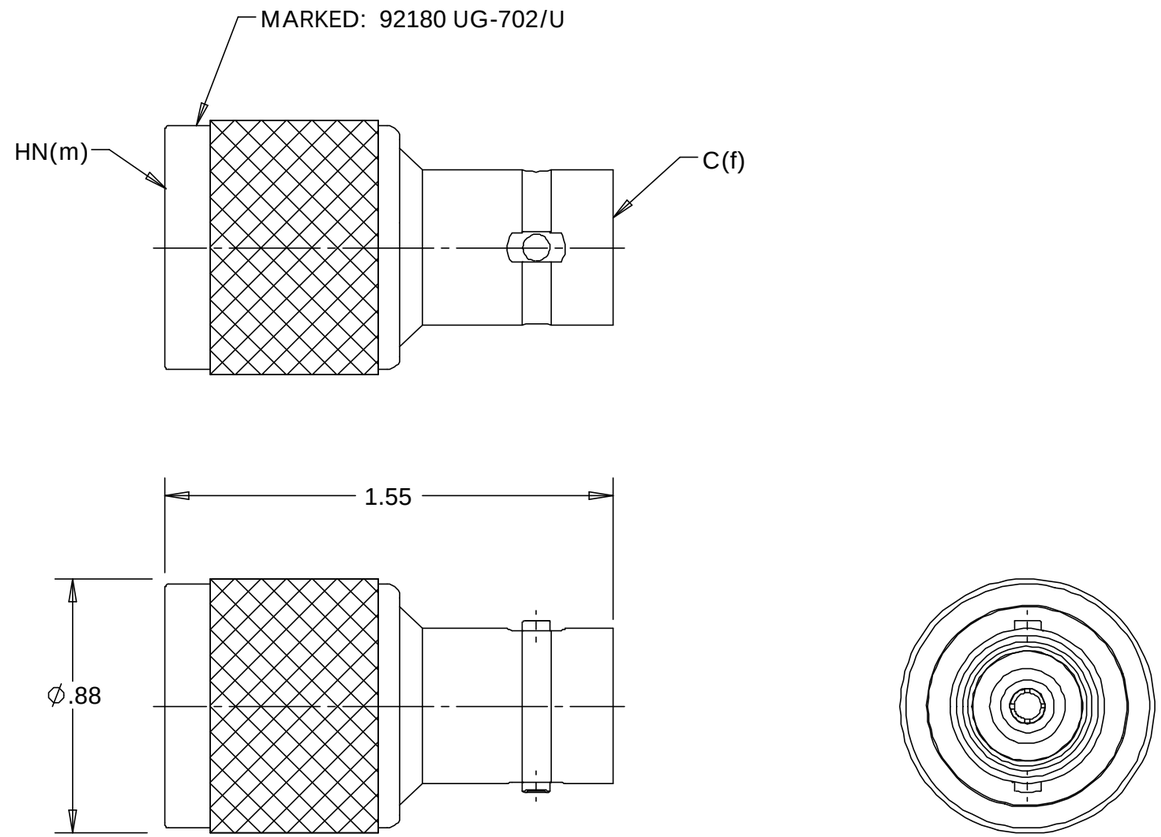

MATERIAL

COMMENTS:

path: S:\SW JOBS\TRU-1124-SSUG\

surface area: sq inch | weight: 0.10 lbs

DO NOT SCALE DRAWING

UNLESS OTHERWISE SPECIFIED: DIMENSIONS ARE IN INCHES

TOLERANCES:
FRACTIONS: ±1/64
.XX : ±.01
.XXX: ±.005
ANGLES: ±1/2`
MACHINED SURFACES:
63

DRAWN	Warren Whitten	DATE 2/17/05
ENG APPR.	AM	DATE 2/18/05
MFG APPR.		DATE
OTHER APPR.		DATE

THIRD ANGLE PROJECTION

TRU CORPORATION
245 LYNNFIELD STREET, PEABODY, MA 01960
The Custom Interconnect Leader™

TITLE:
CONNECTOR, COAXIAL, RF
C(f) to HN(m), ADAPTER, STRAIGHT

SIZE	DWG. NO.	REV
B	TRU-1124-SSUG	-

CAGE CODE: 92180 | SCALE: 2:1 | SHEET 1 OF 1