HOOKER È
FURNITURE

ASSEMBLY INSTRUCTION

Item : 7228-10005-89 Beam Desk

Thank you for purchasing this quality product. Be sure to unpack carefully looking for small parts which may have come loose during shipment.
Read all instruction and study the drawing carefully before starting the assembly process:

HARDWARE PACK

NO	DRAWING	DESCRIPTION	SIZE	Q'TY
A		ALLEN WRENCH	$\frac{5}{32}$"	1 pc
B		BOLT	Ï $\frac{5}{16}$" x $2\frac{3}{8}$"	12 pcs
C		HALFMOON WASHER	Ï $\frac{5}{16}$"	4 pcs
D		LOCK WASHER	Ï $\frac{5}{16}$"	12 pcs
E		FLAT WASHER	Ï $\frac{5}{16}$" x $\frac{3}{4}$"	12 pcs

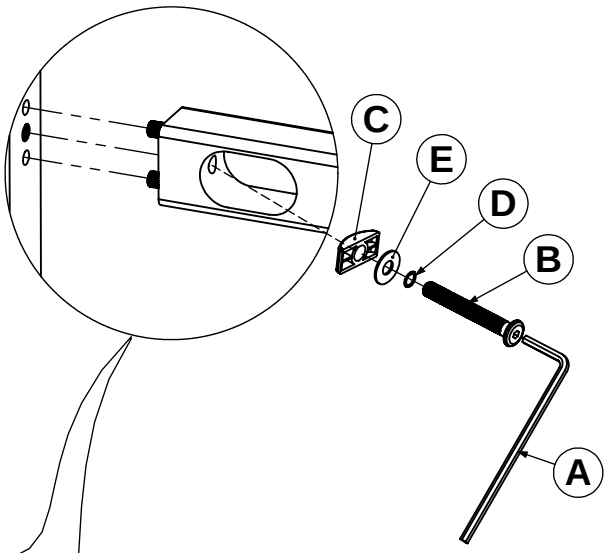

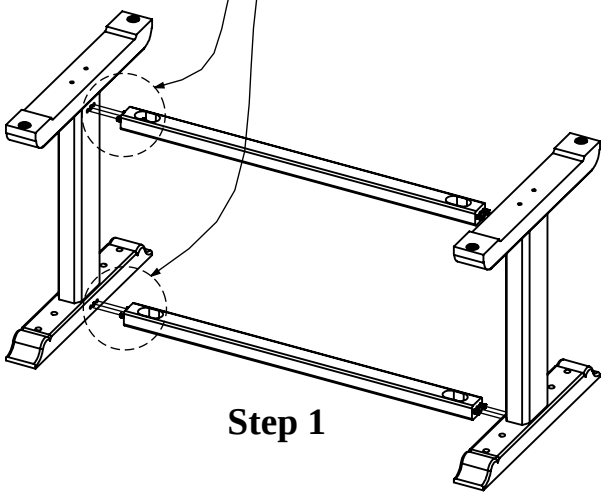

Step 1

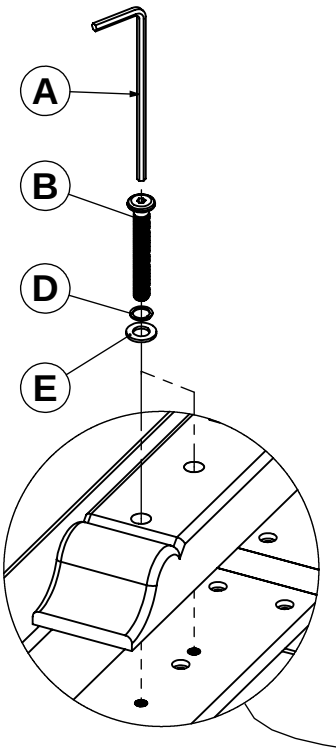

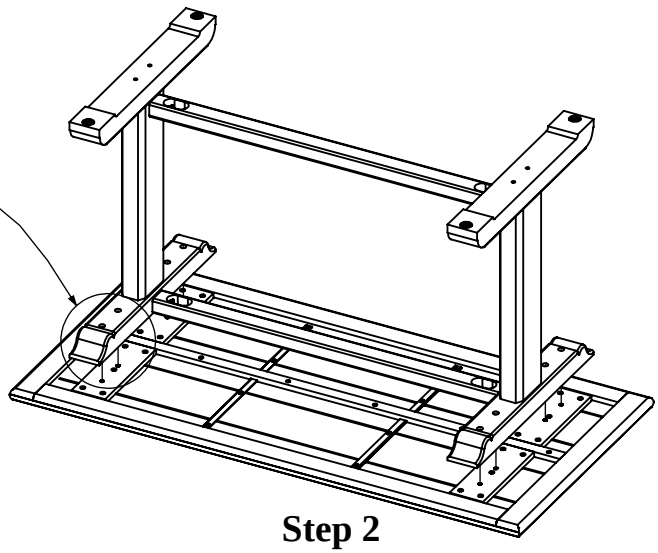

Step 2

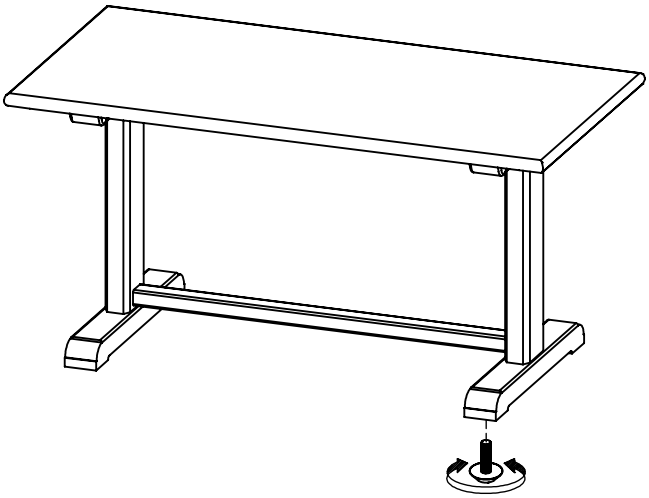

Adjust levelers if needed, to level case on uneven floor