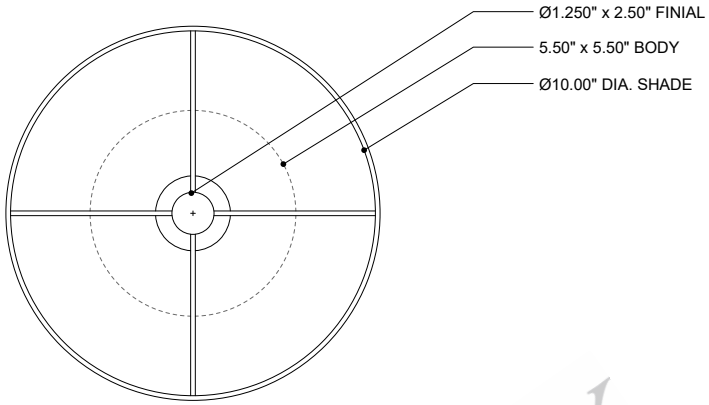

TOP VIEW

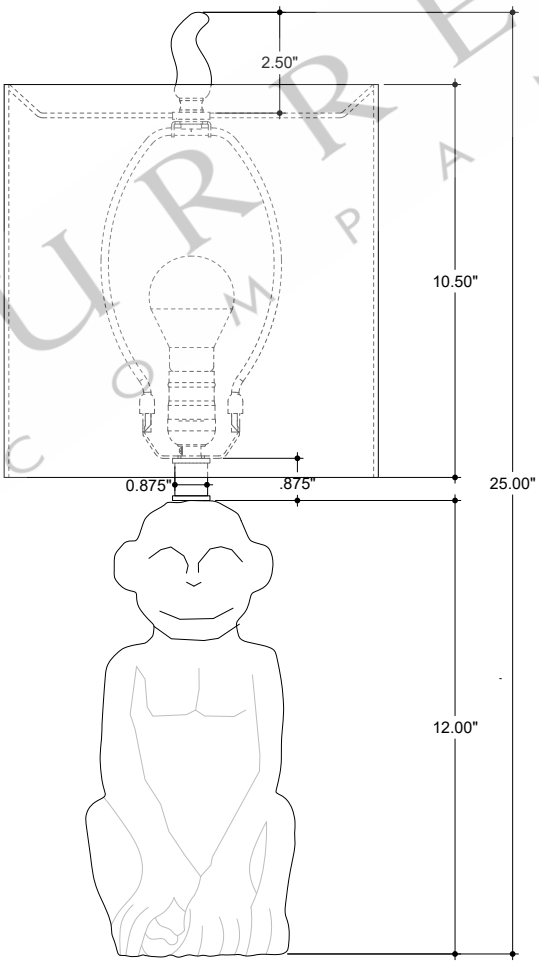

FRONT VIEW

6000-0850

ALL WORK © 2022 CURREY & COMPANY