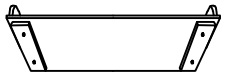

A 1PC

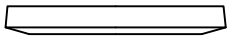

B 1PC

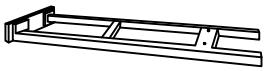

C 2PCS

D 1PC

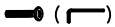

E 8PCS

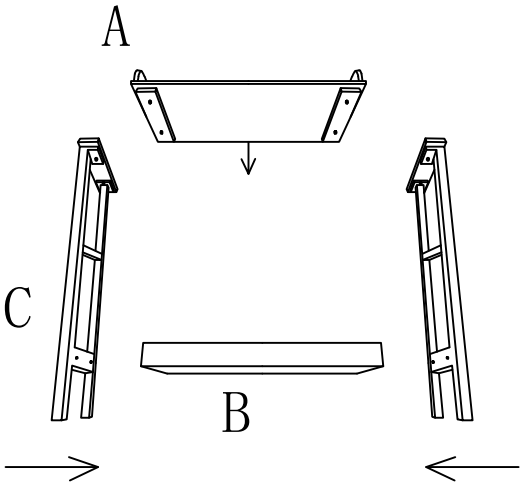

STEP1

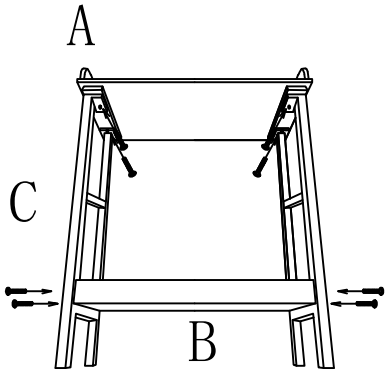

STEP2

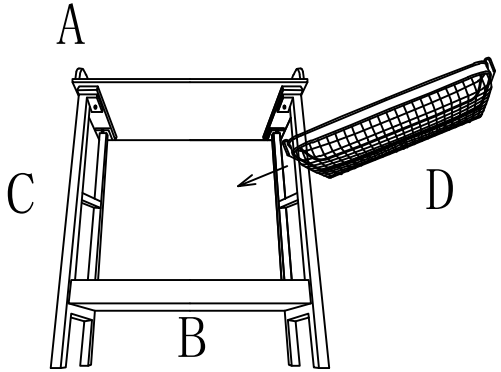

Completion