VTAM6032R22S
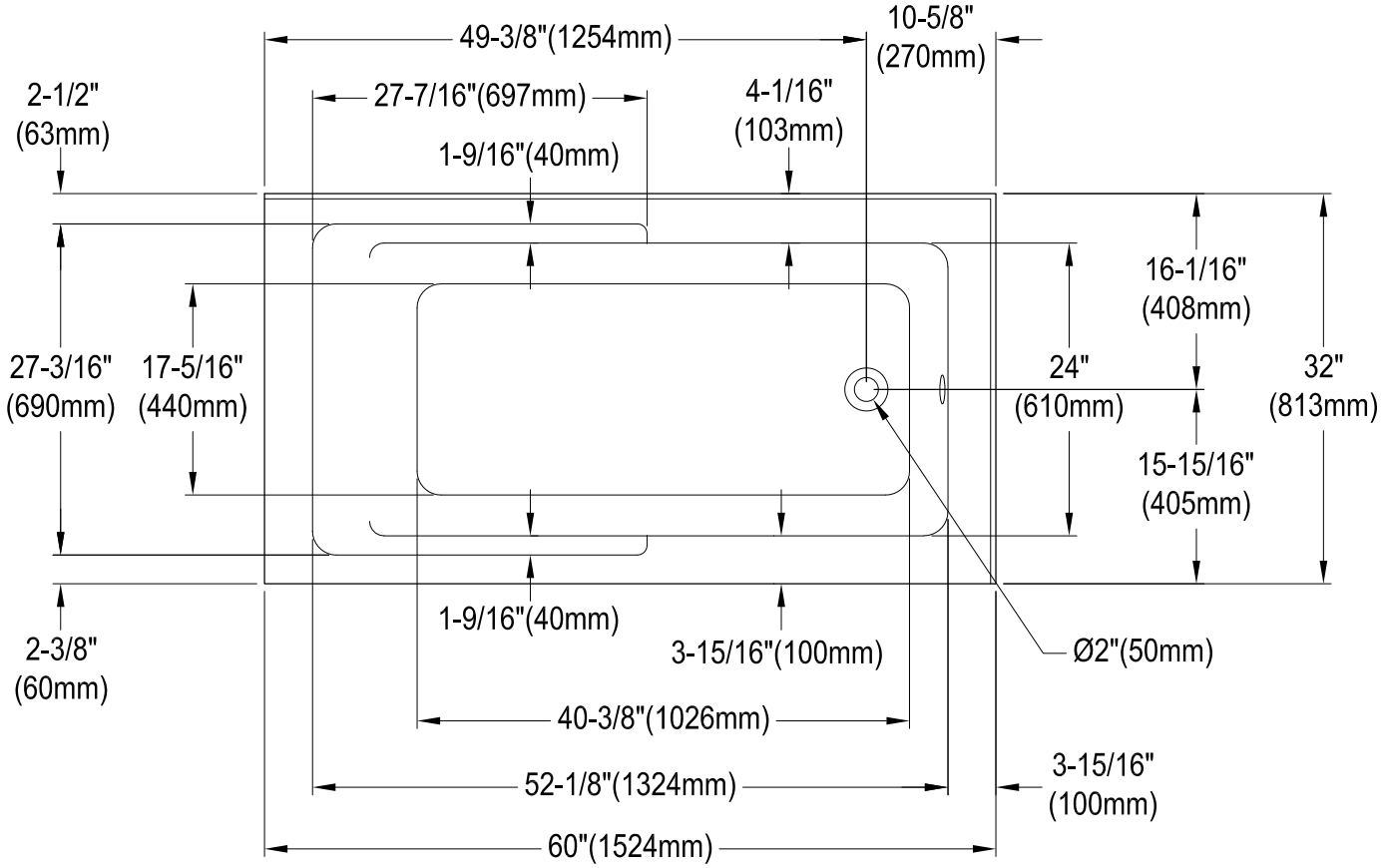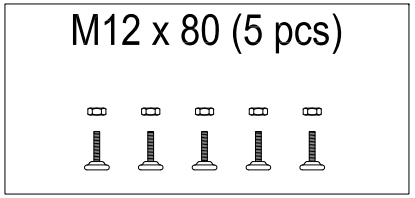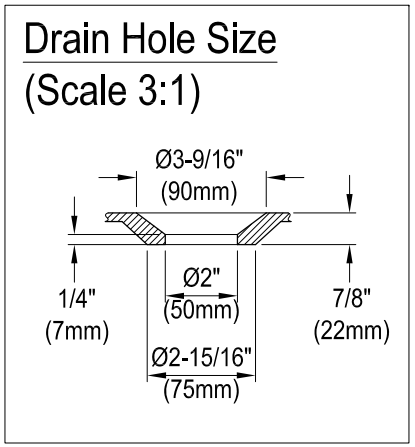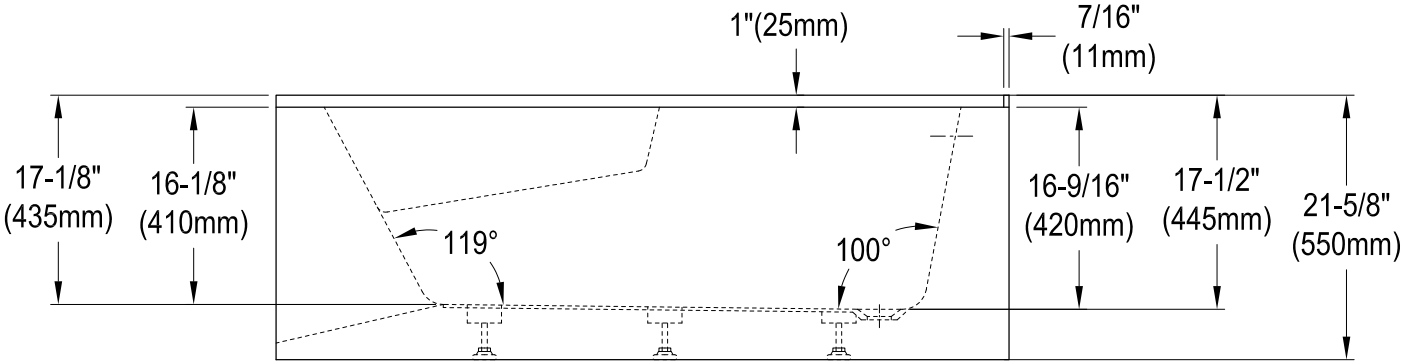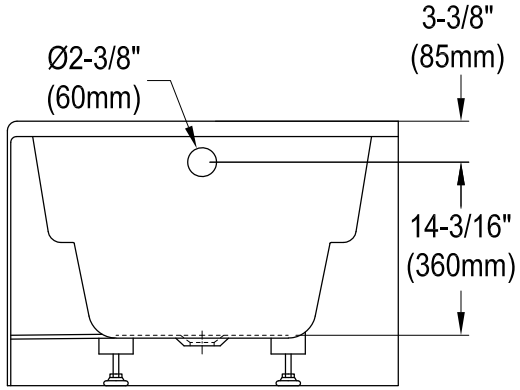
60" Acrylic Alcove Tub with Corner Apron, Right Hand Drain Hole