Installation Instructions for Classic Range Dummy Knob

Step 1.

- Fold Template where indicated.
- Position template on door edge at desired height.
- Firmly hold template & mark 3 hole centres (2 off 8mm & 1 off 12mm) at required backset.
- Drill Pilot holes - suggest 3mm, then enlarge to required size from both sides of door.

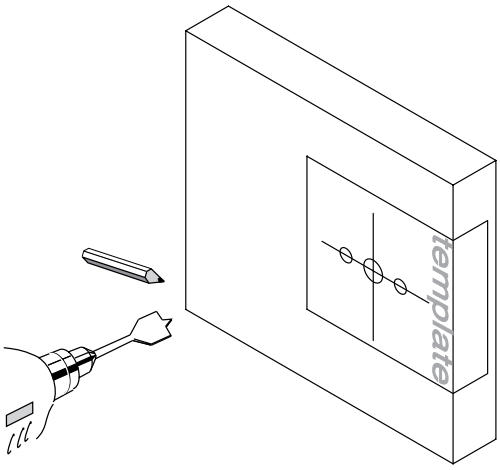

Step 2.

Install knob assembly to door

- Fit posts (7) to dummy plate (4) with screws (6).
- Place dummy plate (4) into position, on back of door.
- Fit fixing disc (3) to front of door & secure in place with screws (2).
- Place dummy knob assembly (1) onto fixing disc (3) and secure by turning the rosette in a clockwise direction until tight.

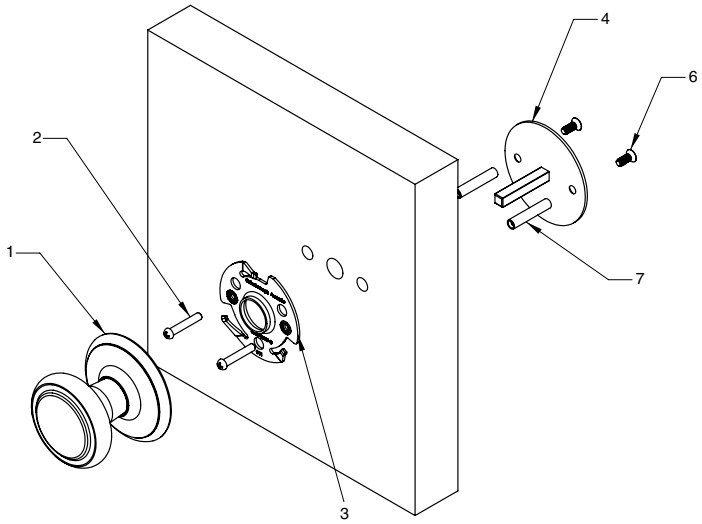

NOTE: Carefully follow these instructions when installing. Screws to be tightened to a recommended 2.5Nm torque.

FOLD HERE

Fit here on door edge

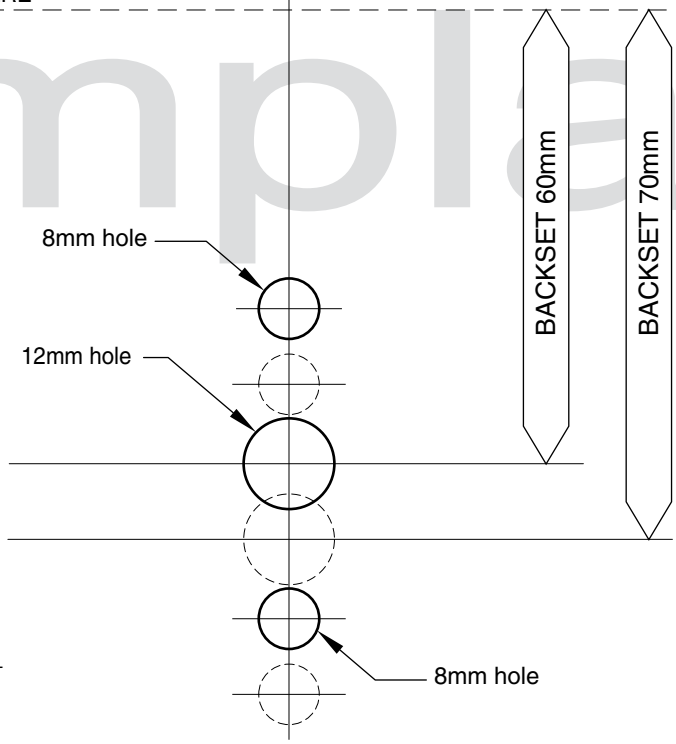

Fit here on door edge

Installation template for dummy applications

Gainsborough

Allegion Australia
Melbourne, Australia. A.B.N. 49 077 898 161
www.gainsboroughhardware.com.au

CLADOC01YL1
JUN '12

PLEASE RECYCLE THESE INSTRUCTIONS

ORIGINATION CRM GSH 853 0612