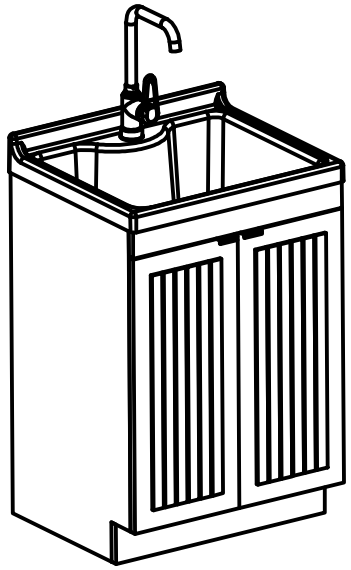

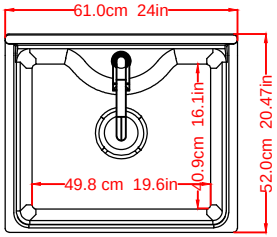
61.0cm 24in
20.47in
52.0cm
16.1in
40.9cm
49.8 cm 19.6in

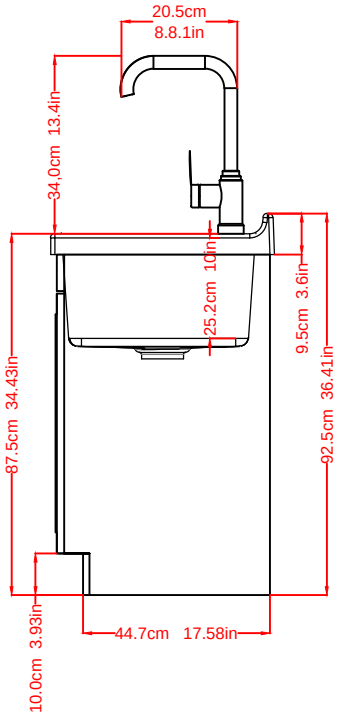
20.5cm
8.8.1in
13.4in
34,0cm
10in
25.2cm
3.6in
9.5cm
34.43in
87.5cm
36.41in
92.5cm
3.93in
10.0cm
44.7cm 17.58in

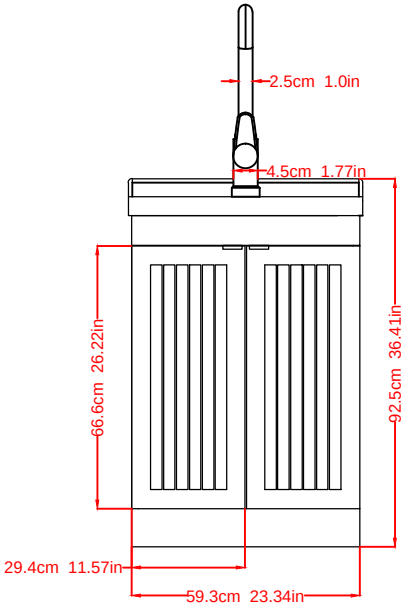
2.5cm 1.0in
4.5cm 1.77in
26.22in
66.6cm
36.41in
92.5cm
29.4cm 11.57in
59.3cm 23.34in