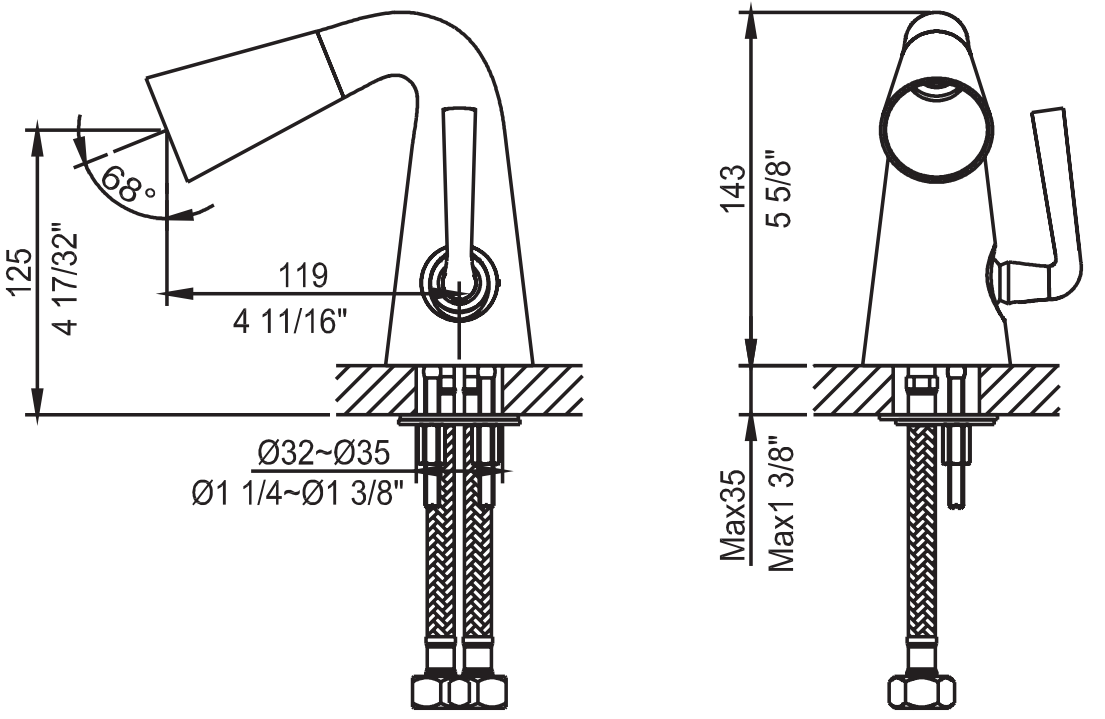
68°
125
4 17/32"
119
4 11/16"
Ø32~Ø35
Ø1 1/4~Ø1 3/8"
143
5 5/8"
Max35
Max1 3/8"