# SHIMANO

## ULTEGRA XSD

## ULT-14000XSD

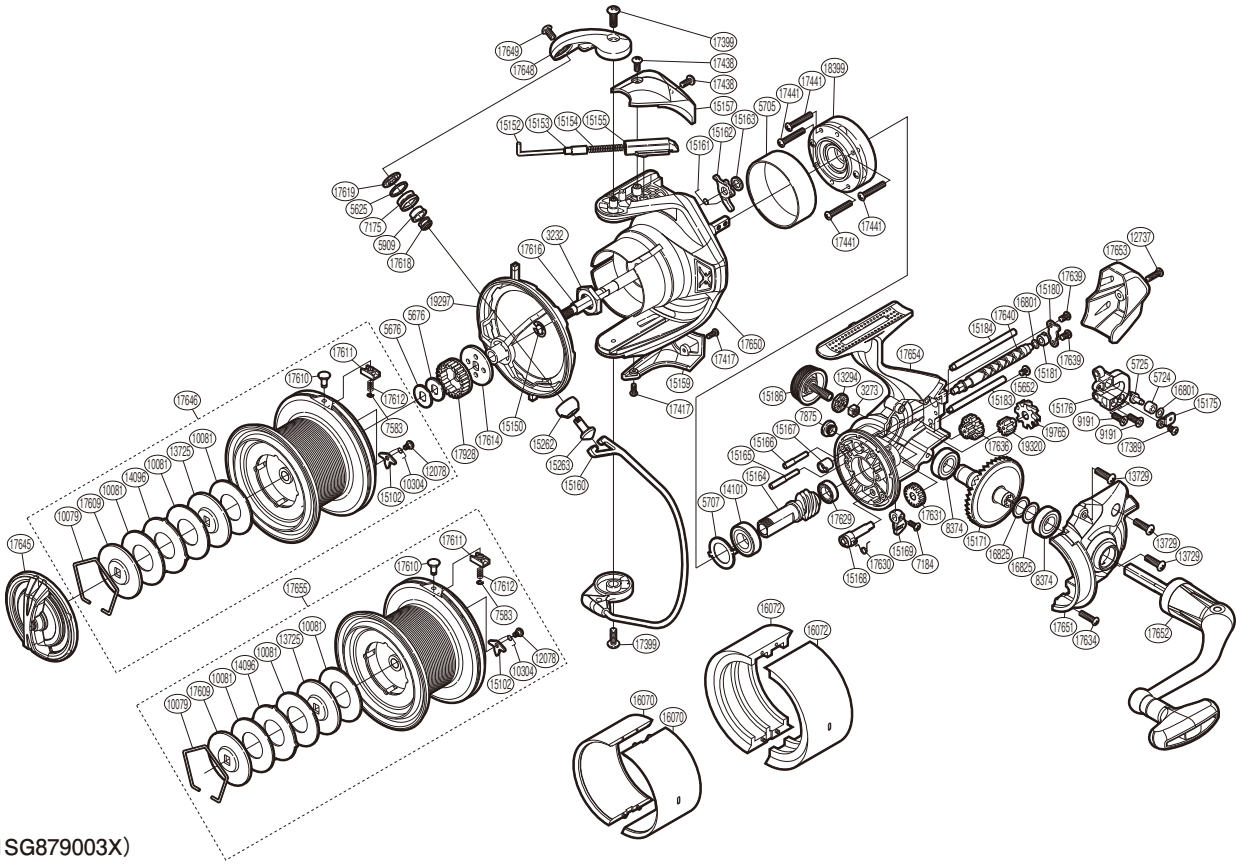

(51SG879003X)

| # | Part No. | Description | # | Part No. | Description | # | Part No. | Description |
|---|---|---|---|---|---|---|---|---|
| 3232 | 107VW | Rotor Nut | 15159 | 10MK2 | Bail Hold Support Guard | 17612 | 10B03 | Line Clip Spring |
| 3273 | 10C6H | Handle Screw Lock | 15160 | 106YX | Bail Assembly | 17614 | 10GH5 | Spool Support B |
| 5625 | 10KFF | Line Roller Spacer | 15161 | 106PM | Lever Spring | 17616 | 103MD | Main Shaft |
| 5676 | 106VN | Spool Washer | 15162 | 106KD | Bail Trip Lever | 17618 | 10CZU | Line Roller Collar |
| 5705 | 106HS | Roller Clutch Ring | 15163 | 10764 | Washer | 17619 | 10PJW | Line Roller Washer |
| 5707 | 106MU | Bearing Washer | 15164 | 10BV7 | Pinion Gear | 17629 | 10EX6 | Ball Bearing |
| 5724 | 10JUY | Oscillating Slider Bushing | 15165 | 10CKK | Idle Gear B Shaft | 17630 | 10DCS | Anti-reverse Cam Spring |
| 5725 | 106V1 | Oscillating Pawl | 15166 | 10H4E | Idle Gear C Shaft | 17631 | 10HBN | Idle Gear |
| 5909 | 10PFJ | Line Roller Bushing | 15167 | 106M2 | Worm Bushing (Front) | 17634 | 10L6Q | Screw |
| 7175 | 10JLX | Line Roller | 15168 | 1053M | Anti-reverse Cam | 17636 | 10H4C | Idle Gear C |
| 7184 | 10LCH | Screw | 15169 | 10G2T | Anti-reverse Lever | 17639 | 10L22 | Screw |
| 7583 | 105NC | E Lock | 15171 | 109FQ | Drive Gear | 17640 | 10822 | Worm Shaft |
| 7875 | 109LW | Oil Cap | 15175 | 10HAD | Oscillating Pawl Cover | 17645 | 1029J | Drag Knob |
| 8374 | 107FL | Ball Bearing | 15176 | 10G62 | Oscillating Slider | 17646 | 1029V | Spool Assembly |
| 9191 | 10ML9 | Screw | 15180 | 10AT4 | Worm Shaft Retainer | 17648 | 10TP8 | Bail Arm |
| 10079 | 10MZP | Drag Washers Retainer | 15181 | 106M3 | Worm Bushing (Rear) | 17649 | 10K91 | Screw |
| 10081 | 1031E | Drag Washer | 15183 | 10357 | Oscillating Guide A | 17650 | 10TP4 | Rotor |
| 10304 | 10JX8 | Click Spring | 15184 | 104M7 | Oscillating Guide B | 17651 | 10TR9 | Side Cover |
| 12078 | 10PH4 | Screw | 15186 | 10N3W | Handle Screw Cap | 17652 | 10DFX | Handle Assembly |
| 12737 | 10LHY | Screw | 15262 | 10G8L | Line Roller Support Cover | 17653 | 10TN3 | Rear Protector |
| 13294 | 108X6 | Handle Screw Lock Washer | 15263 | 10Q3A | Line Roller Support | 17654 | 10DQA | Body |
| 13725 | 10PLN | Key Washer | 15652 | 103LG | Screw | 17928 | 101Y5 | Spool Support A |
| 13729 | 10MBR | Screw | 16801 | 10K9C | Washer | 18399 | 10S0Y | Roller Clutch Assembly |
| 14096 | 10N2H | Eared Washer | 16825 | 10HHK | Washer | 19297 | 10RD1 | Line Safety Guard Assembly |
| 14101 | 104PW | Ball Bearing | 17389 | 10LHN | Screw | 19320 | 10S81 | Idle Gear B Small |
| 15102 | 1038F | Drag Click | 17399 | 10LLJ | Screw | 19765 | 100EY | Idle Gear B |
| 15150 | 105RZ | E Lock | 17417 | 10L1T | Screw | | | |
| 15152 | 105YW | Bail Spring Guide A | 17438 | 10LFF | Screw | 17655 | 1029W | Spare Spool Assembly (accessory) |
| 15153 | 10HDL | Bail Spring Guide A Support | 17441 | 10LJ3 | Screw | 16070 | 10EWH | Spool Economizer A (10000)(accessory) |
| 15154 | 105LK | Bail Spring | 17609 | 10BCF | Key Washer | 16072 | 10A9G | Spool Economizer C (3500) (accessory) |
| 15155 | 107A8 | Bail Spring Guide B | 17610 | 10ATX | Line Clip | | | |
| 15157 | 1087P | Bail Spring Cover | 17611 | 10JQU | Line Clip Holder | | | |

Please note that the number of adjusting washers may not be the same as shown in the exploded views.
(Adjustment will vary with each individual product.)