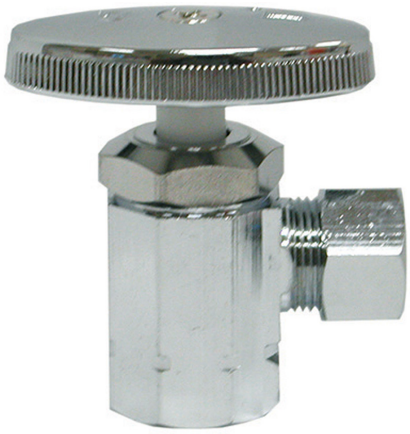

PART NO. S10300

1/2" FIP X 3/8" OD COMP MULTI-TURN ANGLE SUPPLY STOP VALVE, CHROME PLATED

- Chrome plated finish
- Multi-turn oval style handle
- Angle stop design typically used when water supply pipe comes from the wall
- Lead Law Compliant
- Meets or exceeds NSF/ANSI 372-2016, NSF/ANSI 61-2012, ASME A112.18.1-2018/CSA B125.1-18, Safe Drinking Water Act Section 1417(d) and Section 116875 of the California Health & Safety Code
- cUPC listed

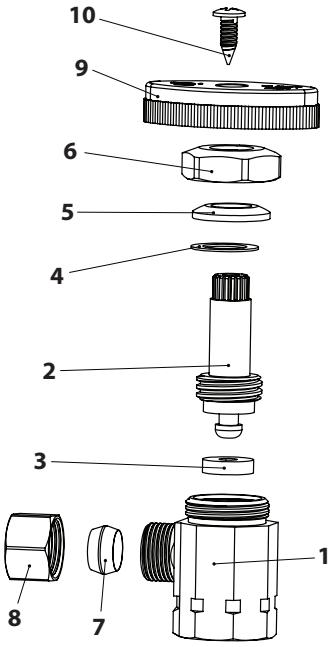

NO.	PART	MATERIAL
1	Body	Brass LF
2	Stem	Plastic
3	Sealing Mat	Rubber
4	Washer	Stainless Steel
5	Gasket	Rubber
6	Pressure Cap	Brass
7	Sleeve	Brass LF
8	Hex Cap	Brass
9	Handle	Plastic
10	Screw	Stainless Steel

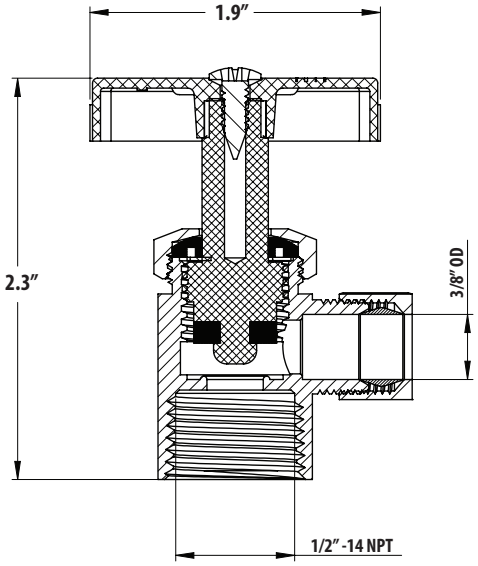

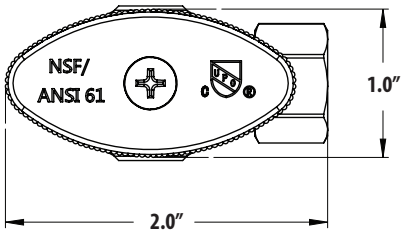

3249 Moody Parkway | Moody, AL 35004 | 800.355.6637 | Fax 800.462.6991| www.jonesstephens.com