CC83250,1,2,3,5,6,7,8X
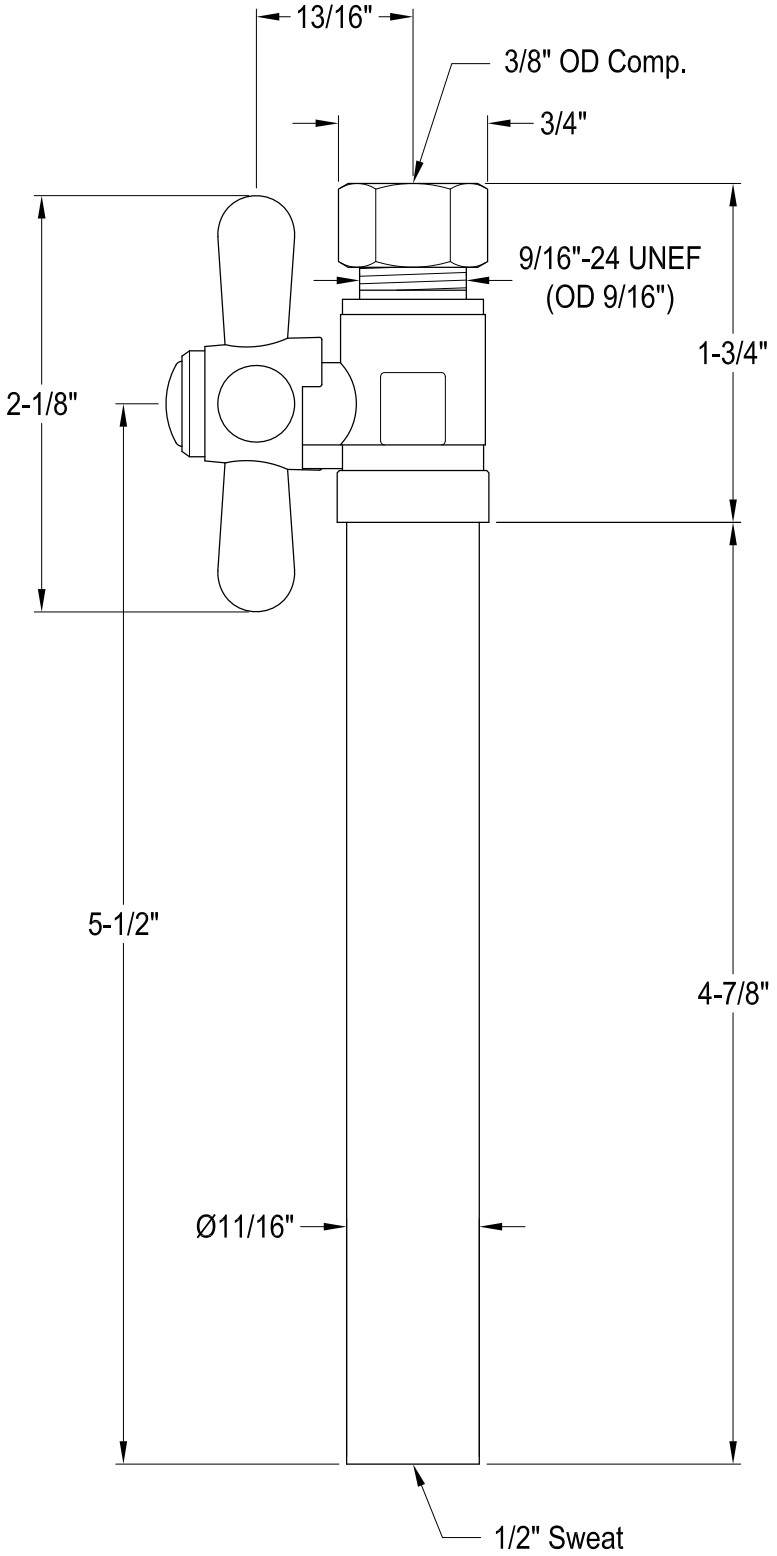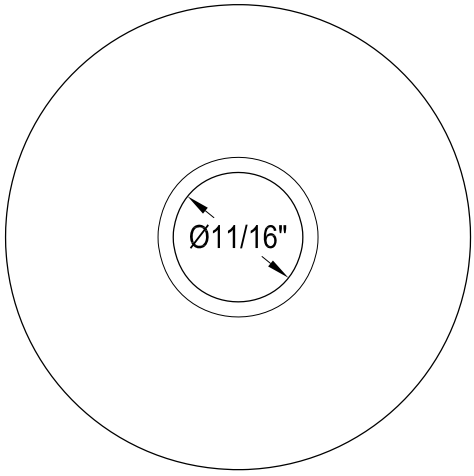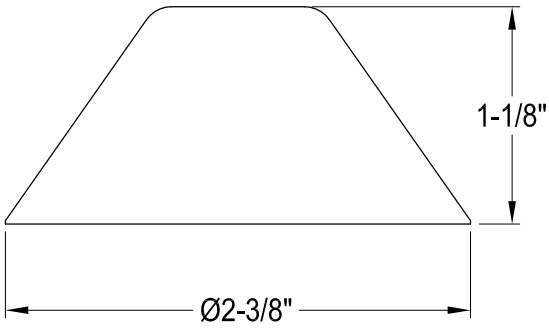
Quarter Turn Valves, 1/2" Sweat & 5" Extension x 3/8" OD Comp.