SHIMANO

NEXAVE

NEX-C5000HG

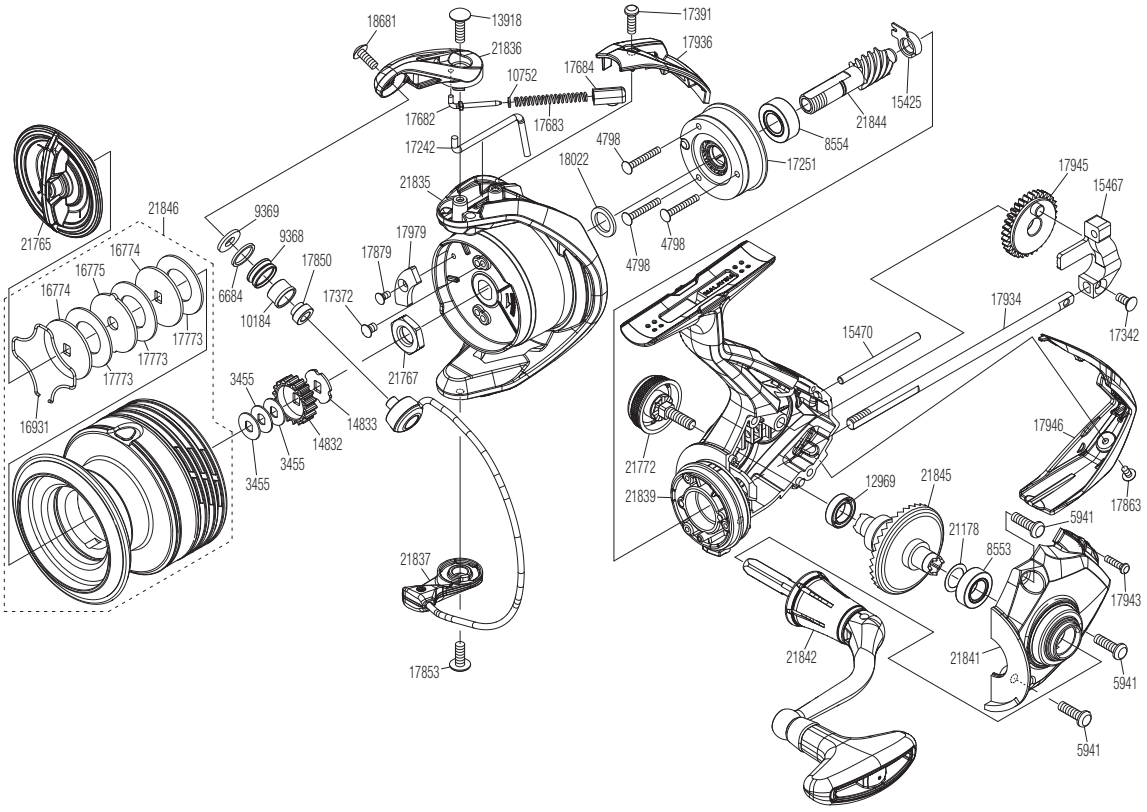

Please note that the number of adjusting washers may not always be the same as shown in the exploded views.

(51SB49FH48X) Please note that your actions take full responsibility when you take it apart.

#	Part No.	Description	#	Part No.	Description	#	Part No.	Description
3455	10BXN	Spool Washer	17251	10QPN	Roller Clutch Assembly	21765	101F1	Drag Knob Assembly
4798	103C6	Screw	17342	10ML7	Screw	21767	10RXE	Rotor Nut
5941	10L9R	Screw	17372	10LCE	Screw	21772	101EZ	Handle Screw Cap Assembly
6684	10KFD	Spacer	17391	10LFK	Screw	21835	101QP	Rotor
8553	107AT	Ball Bearing	17682	1061L	Bail Spring Guide A	21836	101QK	Bail Arm
8554	107FE	Ball Bearing	17683	105R6	Bail Spring	21837	101HK	Bail Assembly
9368	10JLF	Line Roller	17684	107AB	Bail Spring Guide B	21839	101QH	Body
9369	10PFP	Washer	17773	102ZG	Drag Washer	21841	101QM	Side Cover
10184	10PFH	Bushing	17850	1020X	Collar	21842	101QN	Handle Assembly
10752	10TYE	Bail Spring Guide A Collar	17853	10LFH	Screw	21844	10RUG	Pinion Gear
12969	107FA	Ball Bearing	17863	10LCS	Screw	21845	10RUF	Drive Gear
13918	103LT	Screw	17879	10LA3	Screw	21846	101QL	Spool Assembly
14832	103MU	Spool Support A	17934	101SZ	Main Shaft			
14833	10J04	Spool Support B	17936	101T5	Bail Spring Cover			
15425	1074K	Bushing	17943	10LPL	Screw			
15467	10G7E	Oscillating Slider	17945	101SX	Oscillating Gear			
15470	1035B	Oscillating Guide	17946	101SM	Rear Protector			
16774	10BCE	Key Washer	17979	106GA	Counter Weight			
16775	102ZD	Eared Washer	18022	10JVH	Washer			
16931	10B8N	Retainer	18681	10PMH	Screw			
17242	106P4	Bail Trip Lever	21178	10EEZ	Washer			