SIMPLIHOME®

Carlton / Richland / Sterling

TV Media Stand

Model # 3AXCCRL-08

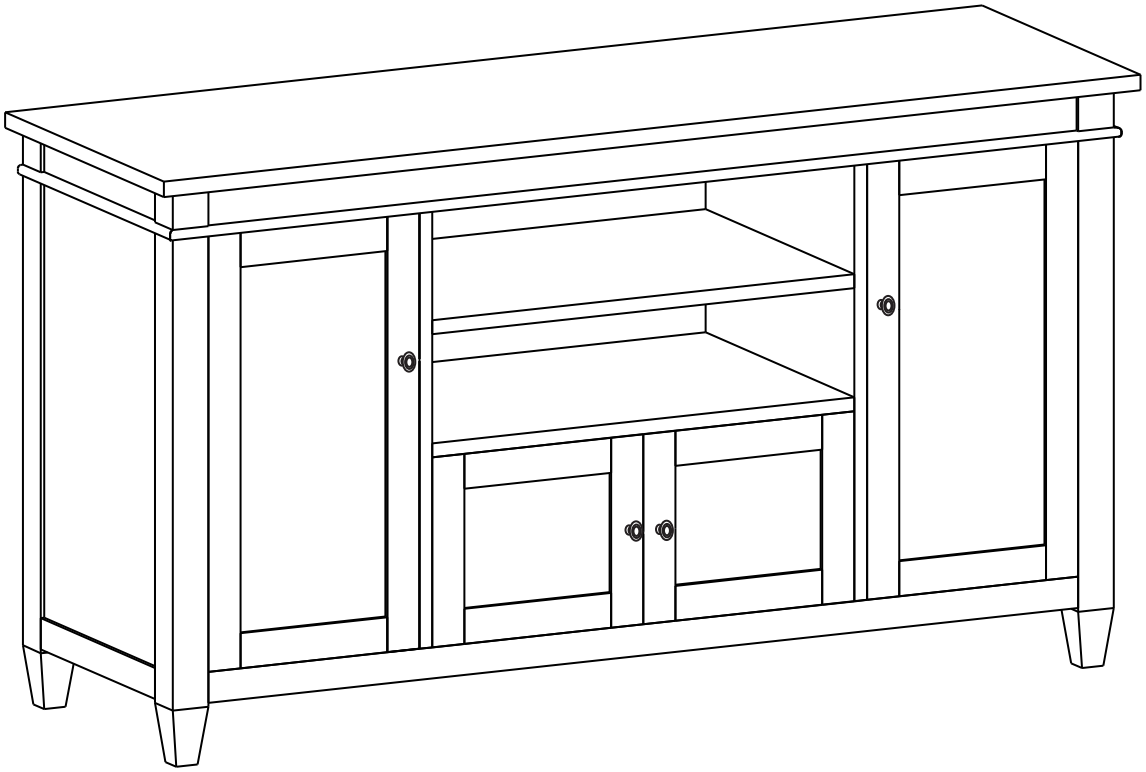

brooklyn + max™

Wyndenhall™ Home Decor

SIMPLIHOME®

Great quality is a right.

Thank you for shopping with Simpli Home,
America's top brand for high-value furniture.

100%
Plastic Neutral Products

It's time to register your product warranty.

It's quick and easy. And you'll be happy you did.

- ✓ Activate your **1-year** warranty
- ✓ Automatic entry to win a **$500** gift certificate
- ✓ Earn instant rewards and **save**

simpli-home.com/product-registration

SIMPLIHOME®

Review your product and collect rewards!

Thank you for your purchase! We hope you enjoy it. We'd love your feedback. Please share a review and get instant rewards!

simpli-home.com/product-review

Share photos and get your cash back!

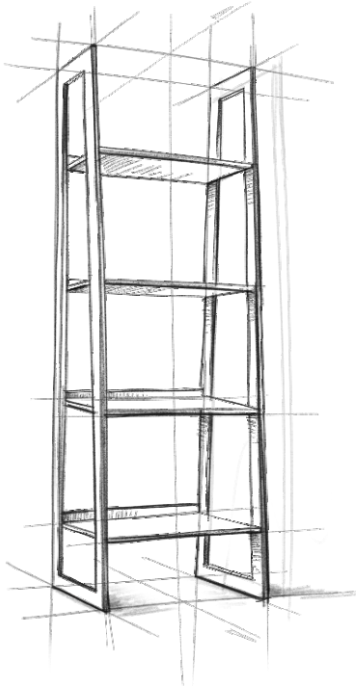

Send us images or share them on social and qualify for instant rewards. You may even receive store credit on your entire purchase!

simpli-home.com/share-images

SIMPLIHOME®

For Fastest Customer Service:

1. Open your phone's camera.
2. Point your phone's camera at the QR code to scan.
3. Click on the pop up.
4. You'll be taken to our customer service page.
5. Fill the form with your order information and issue.
6. Submit form.
7. A customer service associate will contact you.

Other ways to contact us...

Email Us

customerservice@simpli-home.com

Visit Us

Visit our site directly at
www.simpli-home.com

Call Us

1-866-518-0120
Monday to Friday
9am to 5pm EST

***If you've purchased from a retailer and you wish to return the product, please contact the retailer directly.**

IMPORTANT: Please read this manual carefully before beginning assembly of this product. Keep this manual for future reference.

Safety Information

CAUTION: Injuries and damage can occur from furniture tip over if product is not properly anchored to the wall. Use the Furniture Anti-Tipping Restraint provided with the product. Consult our assembly instructions for help.

If the Furniture Anti-Tipping Restraint kit is not in the box, please contact our customer service department in order to obtain another kit before using the furniture.

Identify all the parts and hardware. Do not discard of the packaging until you have checked that you have all of the parts and hardware required. Hardware package may have spare parts.

WARNING: This item contains small parts which can be swallowed by children and pets. Keep children and pets away during assembly. To avoid danger of suffocation, always keep plastic bags away from children and pets. We recommend that you assemble this unit on a carpeted floor to avoid scratches. If using power tools, set the tool to low torque to avoid damage.

May require 2 people for ease of assembly.

Care & Maintenance

This furniture is designed for indoor use.

Perhaps the greatest environmental damage to wood furniture comes from wide swings in relative humidity (RH) in our homes. Wood absorbs and desorbs water as relative humidity rises and falls, and in doing so it swells and shrinks. Making matters worse, it expands and contracts unequally along different grain directions. As humidity changes, the components of wooden objects are continually pushing and pulling against each other. This pressure often results in parts of furniture no longer fitting together closely or becoming distorted or breaking from their own internal stresses.

The response to relative humidity changes begins with determining the annual average RH for your particular space. Then try to keep the RH in the space where your furniture is as close to that average as possible, generally within about 10% up or down. De-humidify in the summer and humidify in the winter.

Be aware that raising the temperature lowers the humidity and vice versa. Thus, modern heating systems, which can drive down interior RH in the winter, almost invariably cause problems for furniture. To counteract their effect, you can either modify the RH by keeping furniture containing spaces cooler in the winter or most importantly, have a good working humidifier for your home. A humidistat automatically works to balance the humidity in your home so it is constant. Dry indoor air can suck enough moisture from its surroundings to do permanent damage to wood, causing it to crack or split.

Remember, that not all woods are created equal. Two factors that help determine how rapidly a wood will lose moisture are pore size and surface hardness. A piece made from a dense and hard wood will dry less rapidly than pieces made from softer woods.

Furniture that is sealed and lacquered will lose moisture more slowly than an unfinished piece while pieces with veneer finishes are not only stronger but lose moisture more slowly than other finishes.

To help protect your wood furniture, take these steps:

- Use a humidifier, preferably one with an automatic control system that can sense the humidity level and adjust itself accordingly
- Don't over-humidify; that can damage wood by causing it to expand and contract
- Keep furniture out of direct sunlight, which can cause it to dry out, crack and warp
- If you can avoid it, don't put furniture near heating vents; if you can’t, keep the item 3 to 4 inches away from the wall, giving the heat and air space to circulate
- Dust with soft dry cloth
- Do not use liquid or aerosol products
- To avoid marking, do not place rubber on surface (foot pads, etc.)
- For soil build-up, wipe with damp cloth & dry
- Do not use abrasive cleaners

WARNING

The maximum diagonal CRT television screen size is 25 inch to 27 inch (63.50 cm to 68.58 cm). For use with televisions weighing 200 lbs or less. Using larger or heavier televisions may cause instability or tip over which can lead to serious injury or even death.

The recommended maximum width of the television intended for use is 60 inch (152.4 cm).

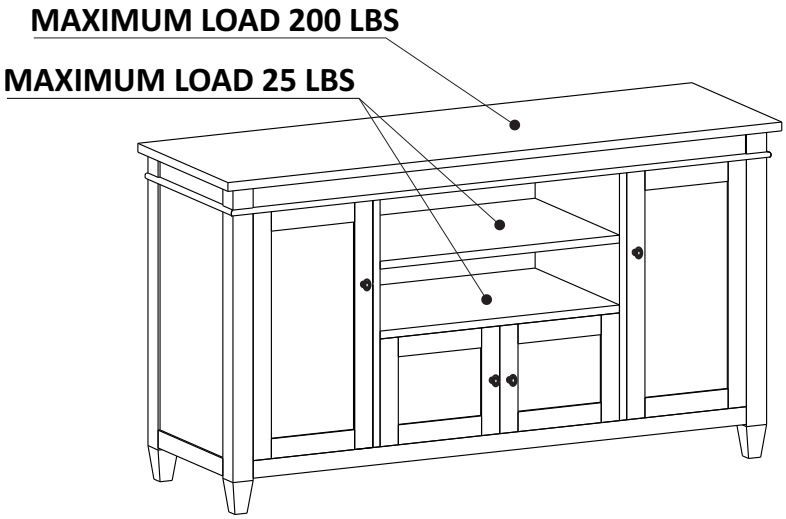

WARNING Do not place toys, food, etc. on the top shelves or upper drawers. Serious injury or death may occur when children climb on furniture. A remote control or items placed on the furniture may encourage a child to climb on the furniture and as a result make it top-heavy and cause it to tip over on the child.

WARNING Do not place a TV that exceeds the weight limits or size guidelines shown in the instructions specified for the furniture. Do not overload shelves or place heavy items on top shelves or drawers.
Improper use of furniture to support TVs may result in serious injury or death.

WARNING Do not relocate audio and/or video equipment to furniture not specifically designed to support audio and/or video equipment. Do not move furniture without shelves or drawers unloaded. Furniture can collapse or tip over onto a child and cause physical injury or death.

This TV Stand does not come with legible instructions pertaining to the risk of fire and electric shock that is associated with the use of electrical components such as operation, user-maintenance, loading, storage and as applicable electrical issues including grounding or double-insulation.
Any use of this item other than that recommended by the manufacturer in this manual may cause fire, burns, electric shock and/or serious injuries or death.

Part Description

A

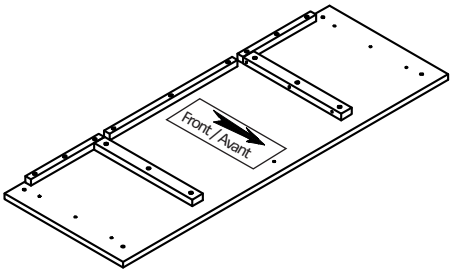

TOP
QTY 1

BL

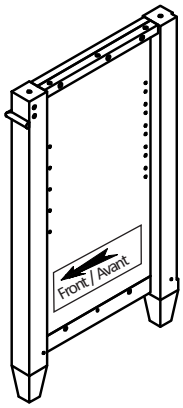

LEFT SIDE
QTY 1

BR

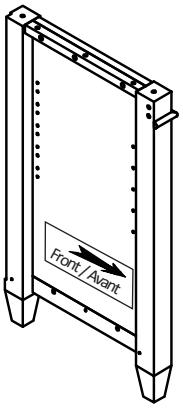

RIGHT SIDE
QTY 1

CL

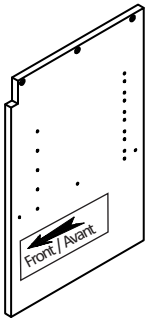

LEFT DIVIDER
QTY 1

CR

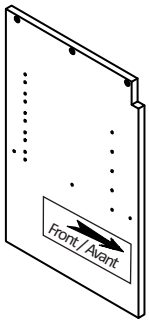

RIGHT DIVIDER
QTY 1

D

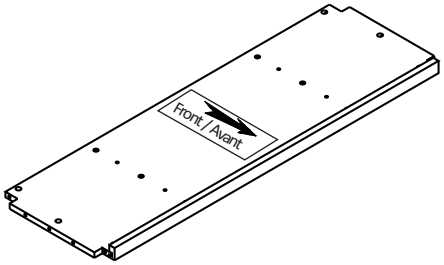

BOTTOM PANEL
QTY 1

E

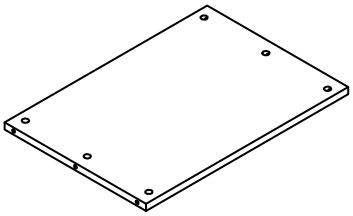

TOP SHELF
QTY 1

FL

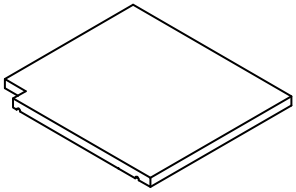

LEFT CABINET SHELF
QTY 1

FR

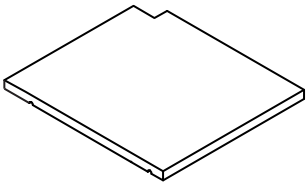

RIGHT CABINET SHELF
QTY 1

Part Description

G

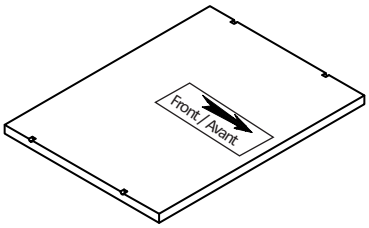

CABINET SHELF
QTY 1

H

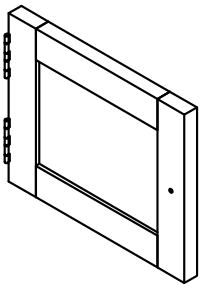

SMALL DOOR (L&R Same)
QTY 2

IL

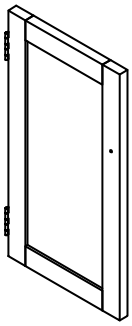

LEFT LARGE DOOR
QTY 1

IR

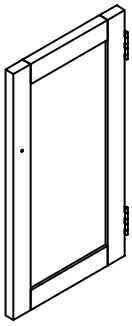

RIGHT LARGE DOOR
QTY 1

JL

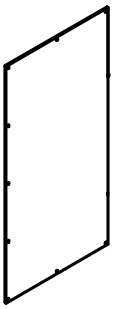

LEFT BACK PANEL
QTY 1

JR

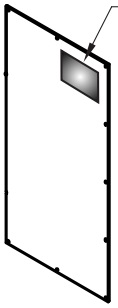

RIGHT BACK PANEL
QTY 1

J1

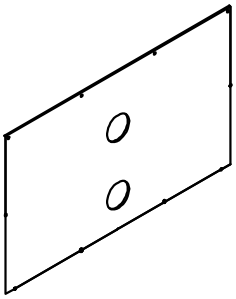

TOP BACK PANEL
QTY 1

J2

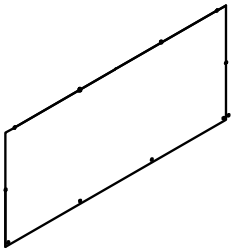

BOTTOM BACK PANEL
QTY 1

K

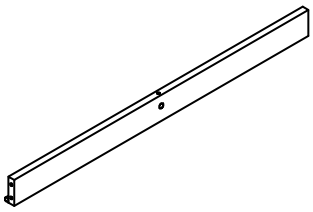

FRONT BAR
QTY 1

Hardware Description

1

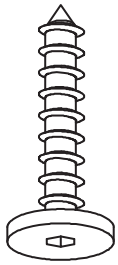

ALLEN KEY SCREW
M6 X 30 mm
QTY 18

2

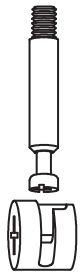

CAM LOCK PIN
CAM LOCK
QTY 13 SETS

3

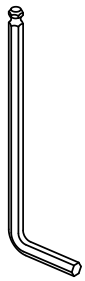

ALLEN KEY
QTY 1

4

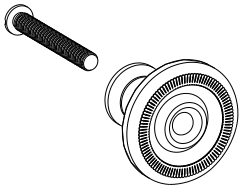

HANDLE
M4 X 25 mm
QTY 4 SETS

5

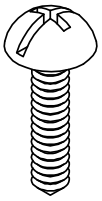

PHILLIPS SCREW
ROUND HEAD
M4 X 15 mm
QTY 34

6

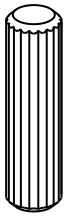

WOOD DOWEL
Ø8 X 30 mm
QTY 16

7

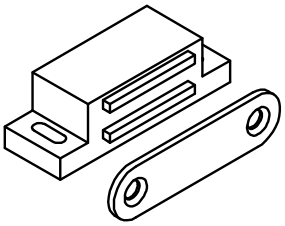

MAGNET AND PLATE
QTY 4 SETS

8

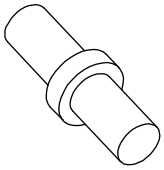

SHELF SUPPORT
QTY 18

9

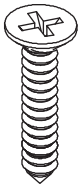

PHILLIPS SCREW
M3 X 15 mm
QTY 16

10

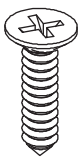

PHILLIPS SCREW
M3 X 12 mm
QTY 24

11

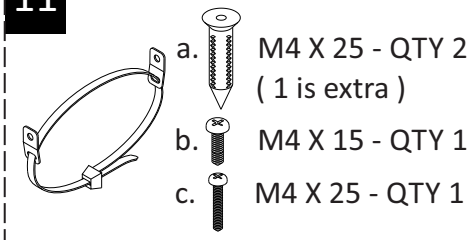

FURNITURE TIP OVER RESTRAINT
QTY 1 SET

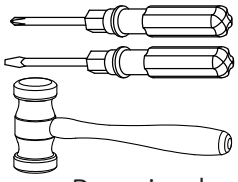

Required-
Flathead screwdriver
Phillips screwdriver
Rubber mallet
Not Included

Components - Key Diagram Model # 3AXCCRL-08

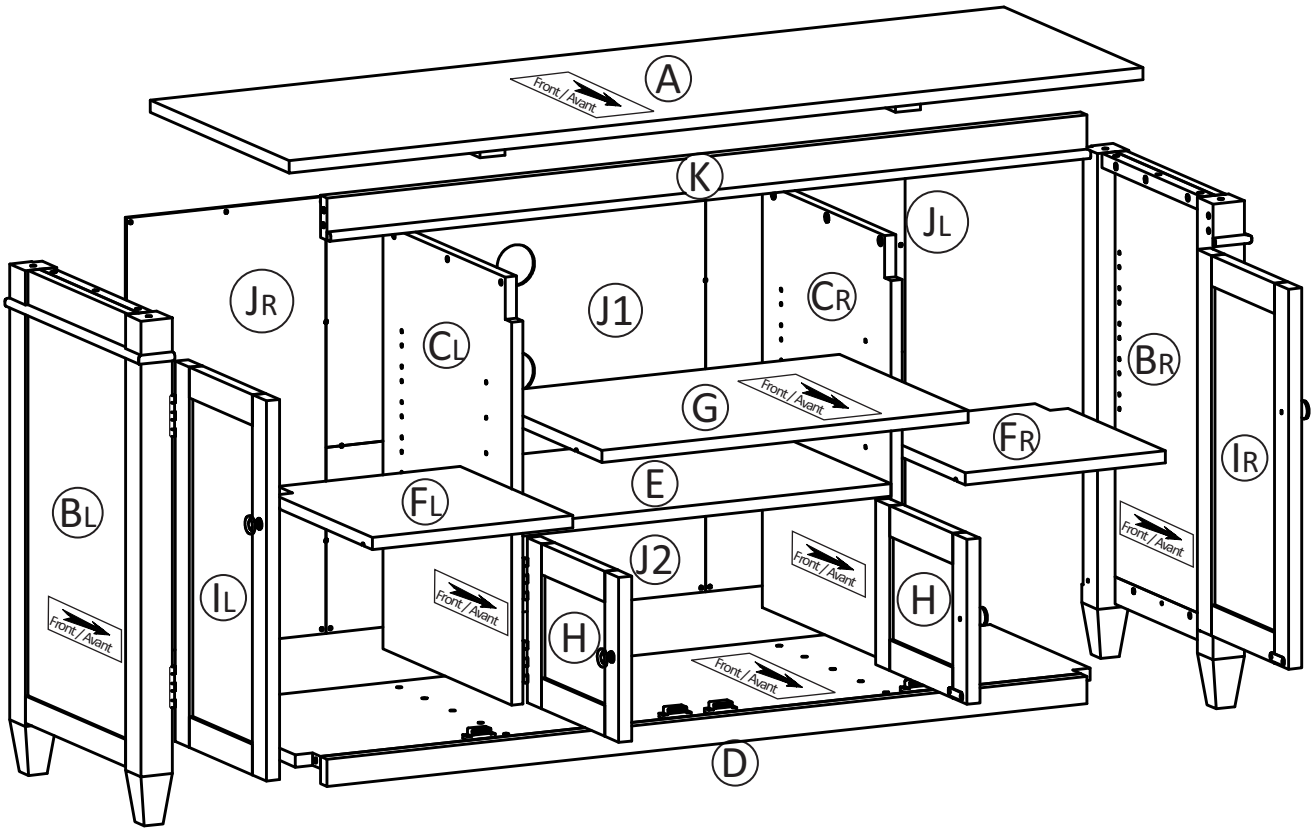

Step 1

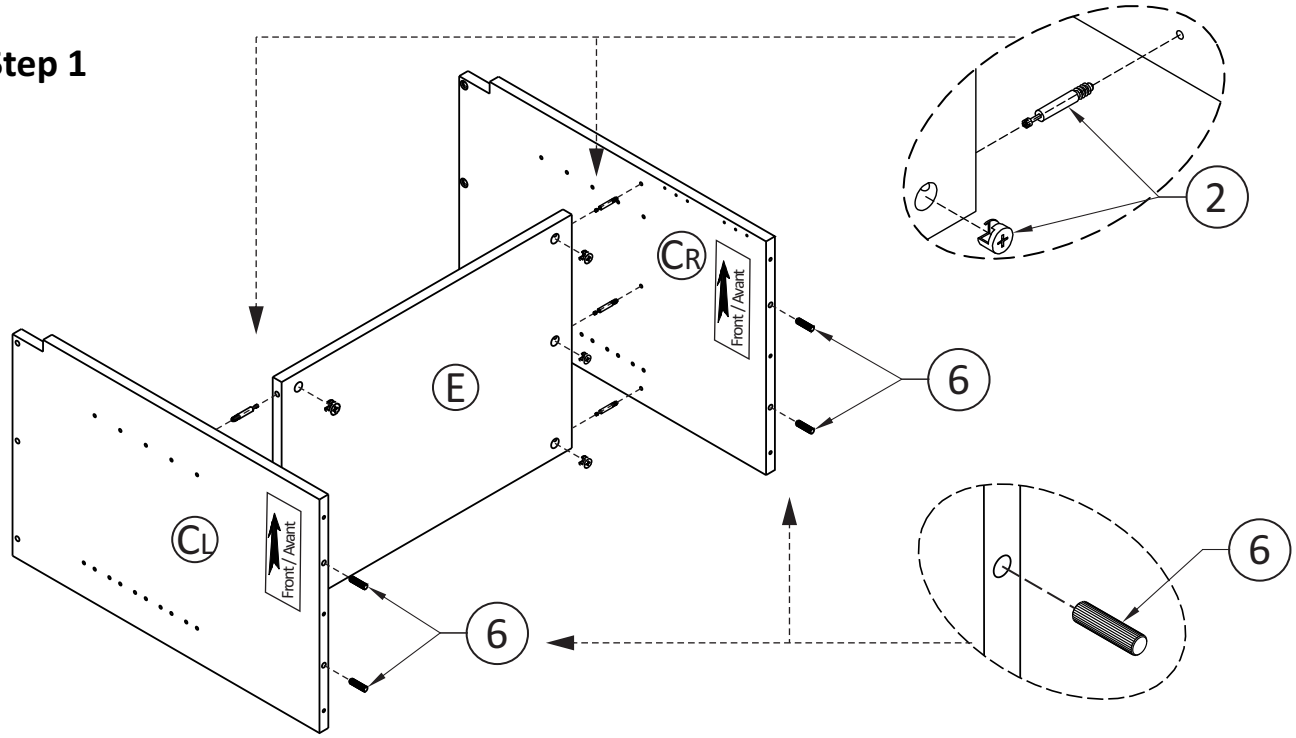

1. Attach 3 Cam Lock Pins ② to each Divider (DL), (DR) using guide holes.
2. Align Cam Locks ② into pre-drilled hole on Top Shelf (E).
3. Insert Cam Locks ② into pre-drilled hole on Top Shelf (E).
4. Use flathead screwdriver secure Cam Lock.
5. Insert Wood Dowels ⑥ into pre-drilled holes of Dividers (CL), (CR).
6. Use rubber mallet to tap Dowels ⑥ into bottom of holes securely. 1/2 length of dowels should be exposed.

Step 2

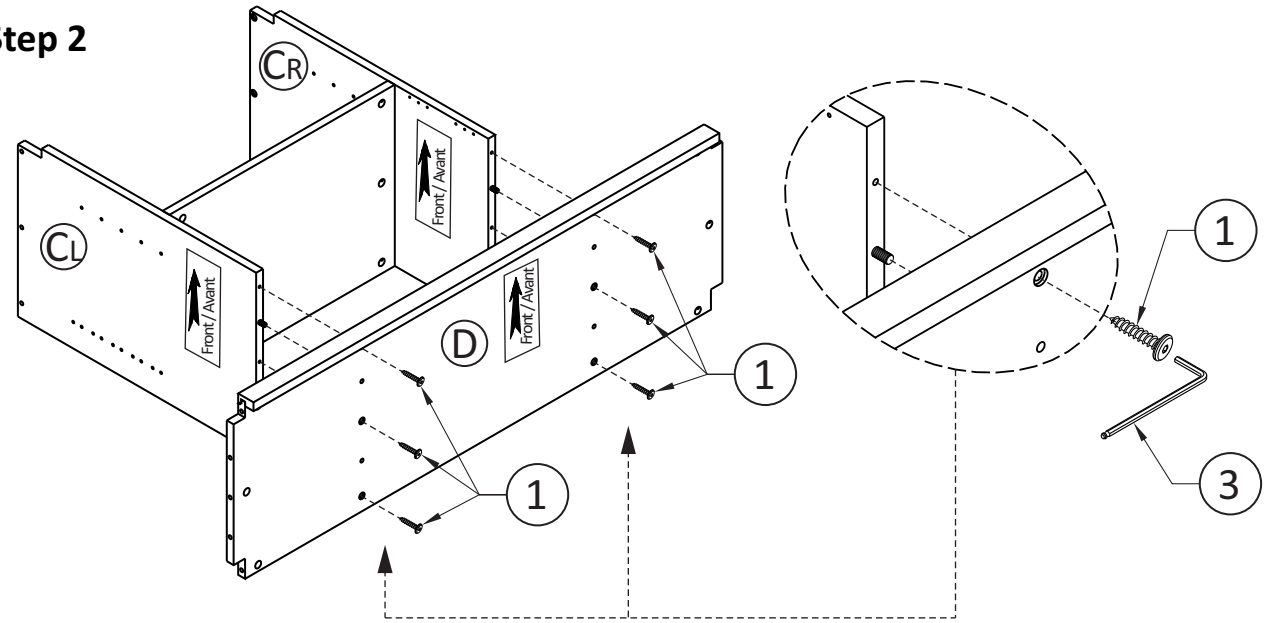

1. Attach Dividers (CL), (CR) to Bottom Panel (D) with Allen Key Screws ① through pre-drilles holes.
2. Use Allen Key ③ to tighten Screws . Do not over-tighten.

Step 3

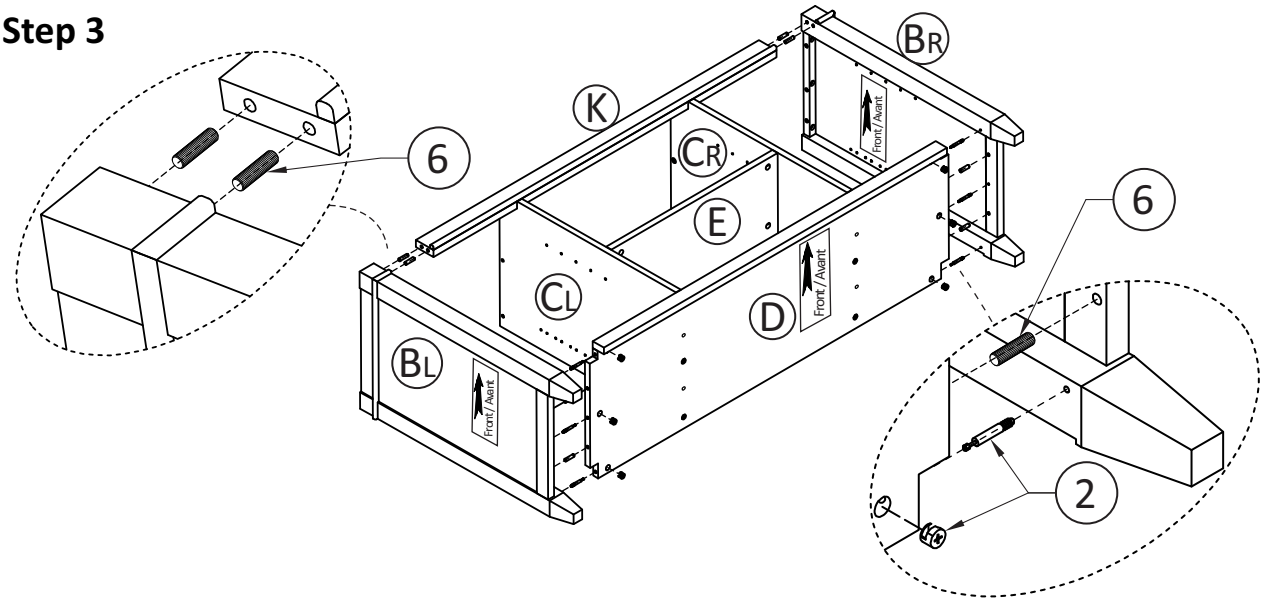

1. Insert Wood Dowels ⑥ into pre-drilled holes of Bottom Panel Ⓓ and Front Bar Ⓚ.
2. Use rubber mallet to tap Dowels ⑥ into bottom of holes securely. 1/2 length of dowels should be exposed.
3. Attach Cam Lock Pins ② to Sides (BL), (BR) using guide holes.
4. Align Cam Locks Pins ② into pre-drilled holes on Bottom Panel Ⓓ.
5. Insert Cam Locks ② into pre-drilled holes in Bottom Panel Ⓓ
6. Once in place tighten Cam Locks ② using a flathead screwdriver.

Step 4

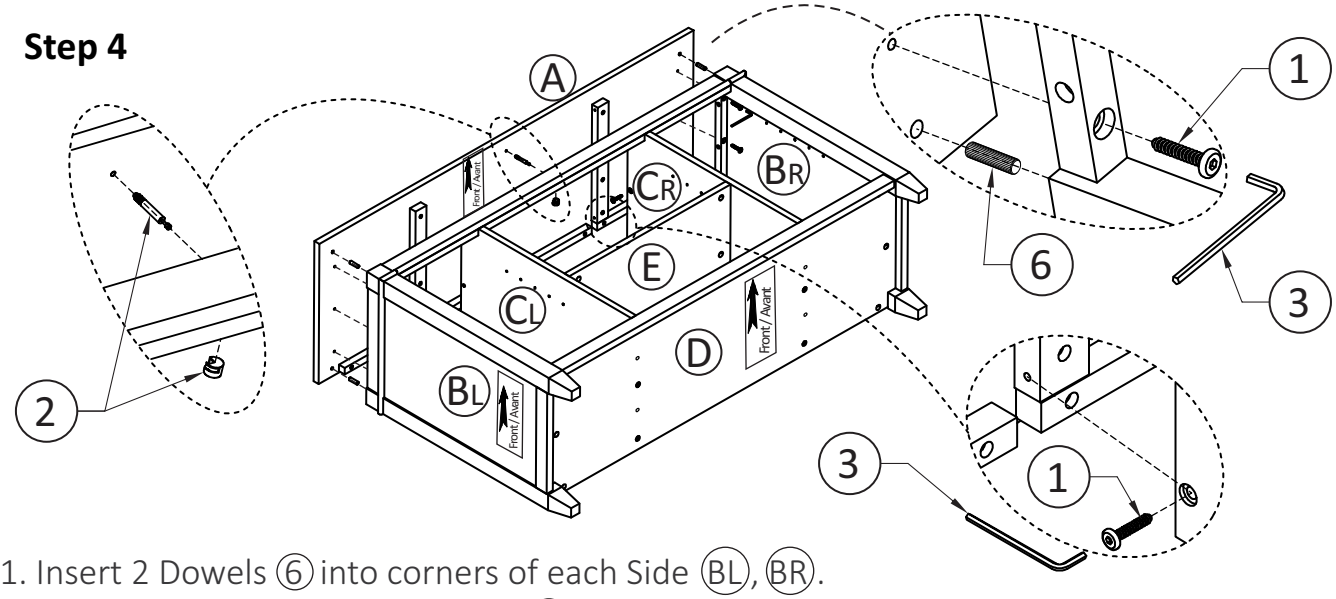

1. Insert 2 Dowels ⑥ into corners of each Side (BL), (BR).
2. Use rubber mallet to tap Dowels ⑥ into bottom of holes securely. 1/2 length of dowels should be exposed.
3. Attach Cam Lock Pin ② to Top Ⓐ using guide holes.
4. Aligh Cam Lock ② into pre-drilled hole on Front Bar Ⓚ.
5. Align pre-drilled holes on bottom corners of Top Ⓐ with Dowels ⑥ in Sides (BL), (BR).
6. Insert Cam Lock ② into pre-drilled holes on Front Bar Ⓚ.
7. Use 12 Allen Key Screws ① attach Top Ⓐ to Sides (BL), (BR) and Dividers (CL), (CR).

Step 5

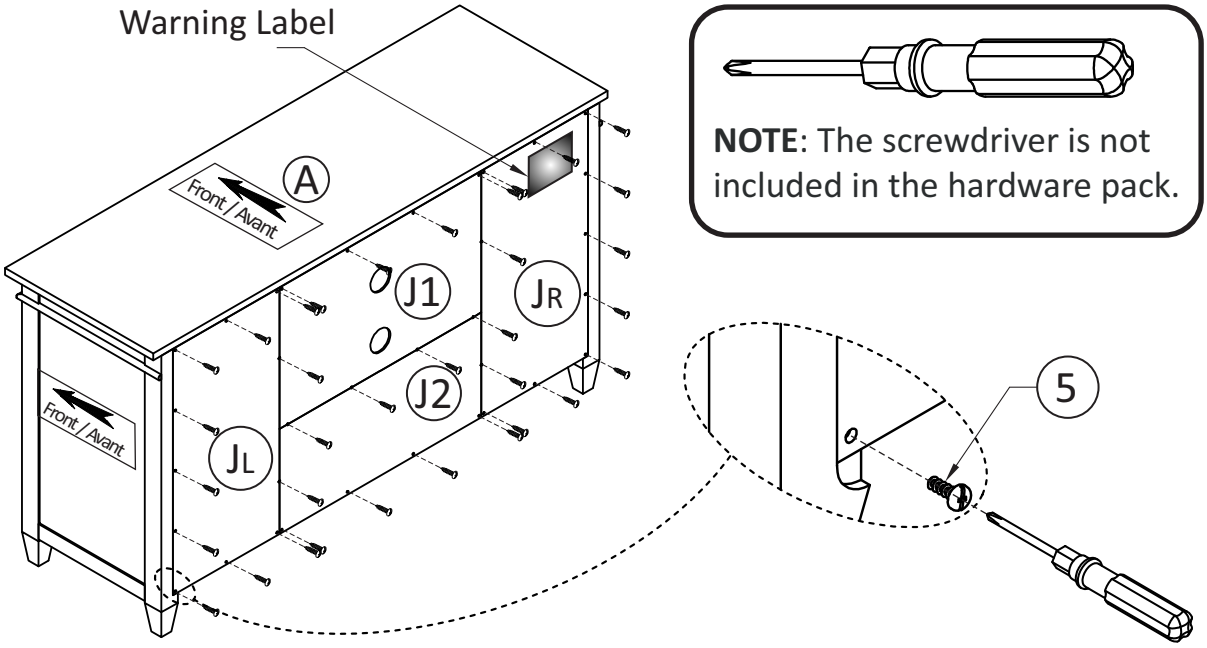

NOTE: The screwdriver is not included in the hardware pack.

1. Attach Back Panels JL, JR, J1, J2 to back of cabinet using Phillips Screws Round Head 5 into pre-drilled guide holes.
2. Use Phillips screwdriver to tighten screws.

Step 6

NOTE: The screwdriver is not included in the hardware pack.

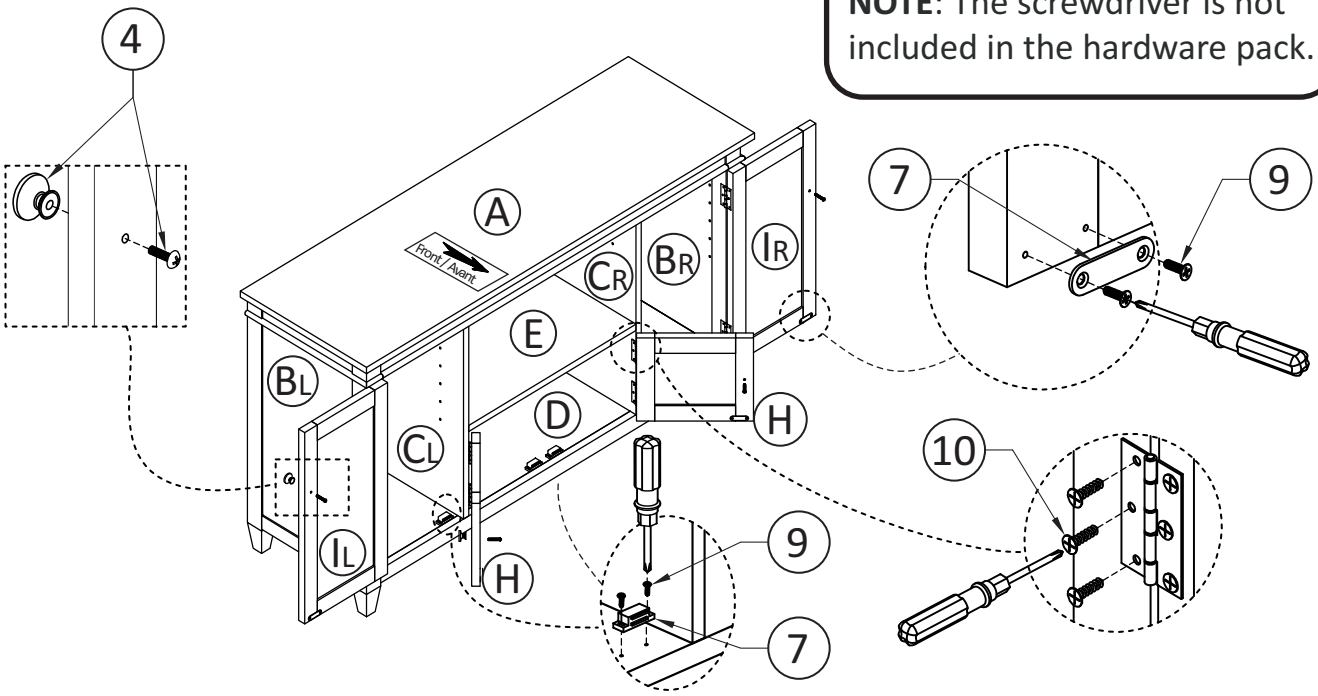

1. Attach hinges on Large Doors IL, IR and Sides BL, BR using Phillips Screws 10.
2. Attach hinges on Small Doors HL, HR and Divider CL, CR using phillips Screws 10.
3. Attach Magnet Plates 7 to Bottom corner of Doors IL, IR and HL, HR using Phillips Screws 9 into guide holes on Doors IL, IR and HL, HR.
4. Attach Magnet 7 using Phillips Screws 9 into guide holes on Bottom Panel D.
5. Use a Phillips screwdriver to attach Handles 4 to Doors IL, IR and HL, HR.

Step 7

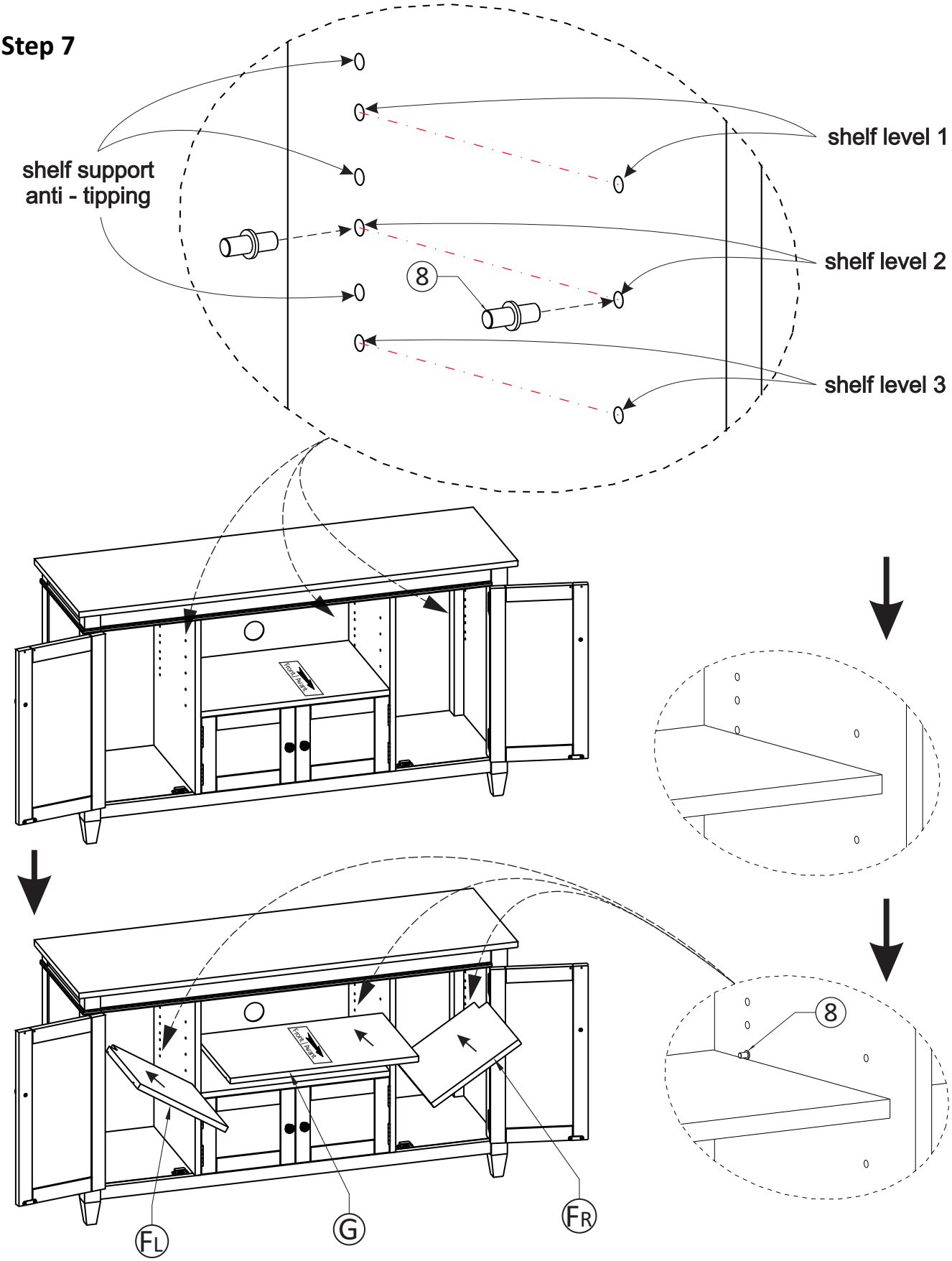

1. Use 4 Shelf Supports ⑧ for each shelf (FL), (FR) & (G) in desired location.
2. 2 Shelf Supports ⑧ may be used on back top of each Shelf (FL), (FR) & (G) as a tipping restraint.

Furniture Tip Over Restraint Assembly

WARNING

Serious or fatal crushing injuries can occur from furniture tip-over.
If the furniture tip over restraint kit is not in the box, please contact our customer service department in order to obtain another kit before using the furniture.

Step 8

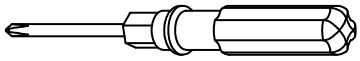

NOTE: The screwdriver is not included in the hardware pack.

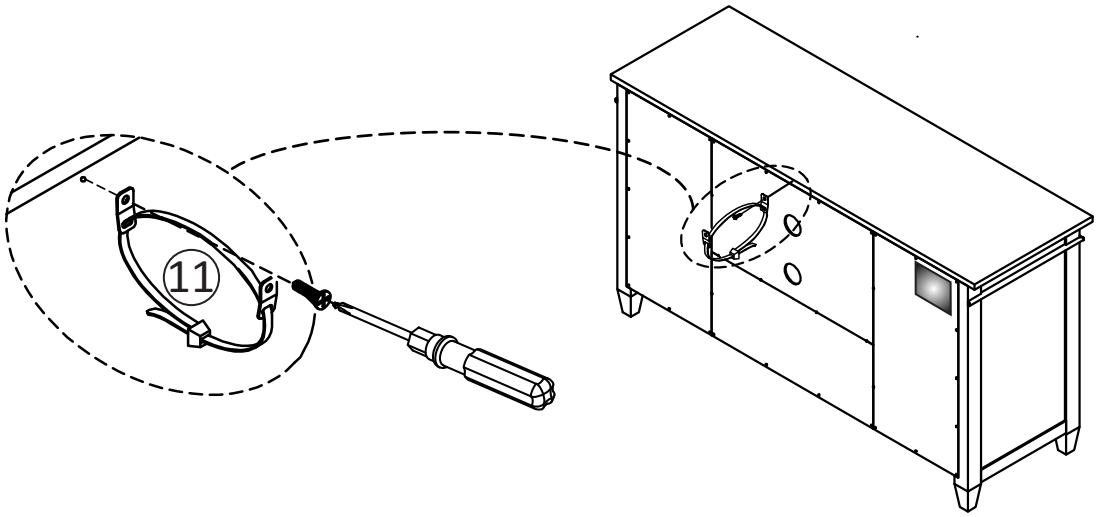

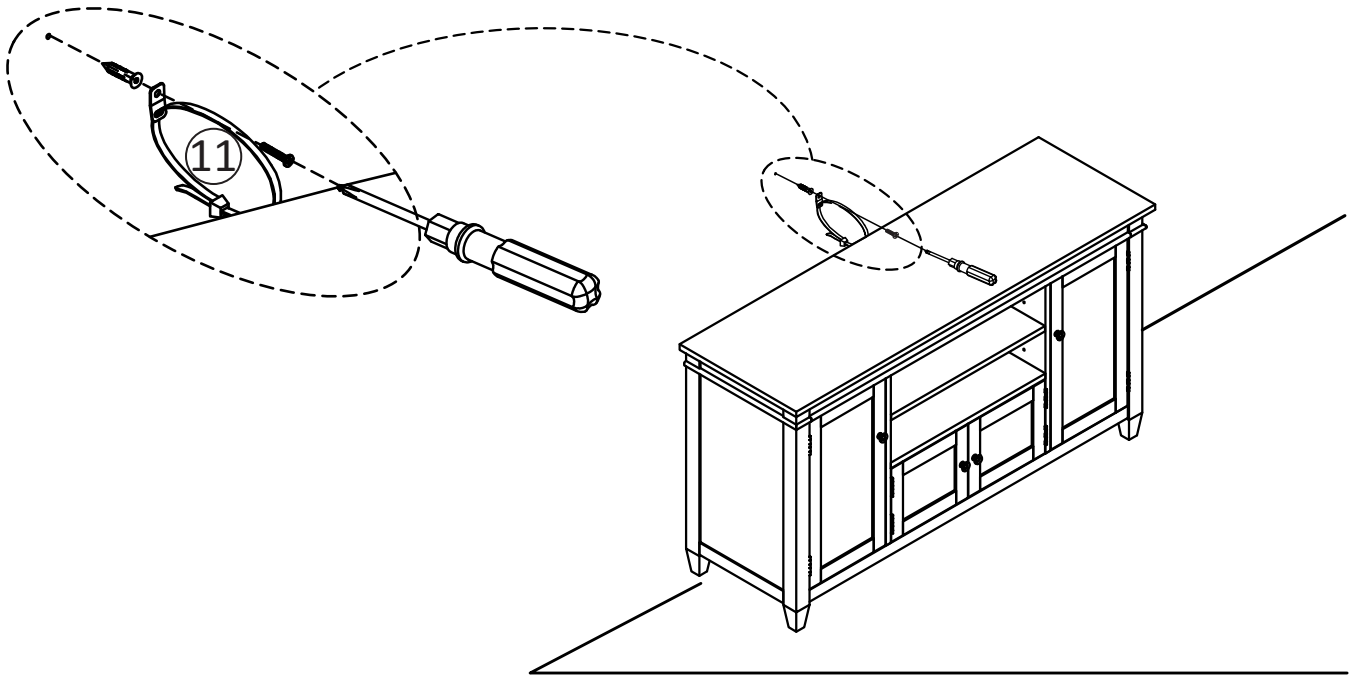

Furniture Anti-Tipping Restraint Instructions

1. Attach one of the mounting brackets securely to the back edge of the furniture. Use the shorter screw.

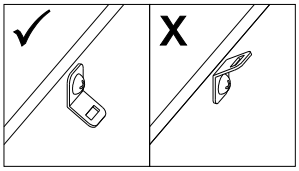

2. Determine where furniture is to be placed and mark location on the wall for mounting bracket screw hole approximately 2 inches below the bracket mounted to the furniture.

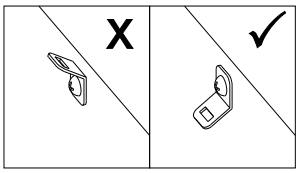

3. Drill a 3/16 inch hole in the wall. Press the plastic anchor into the hole and gently tap until the flange on the anchor is against the wall surface.
4. Position the bracket over the anchor and use the longer screw to securely attach the bracket to the wall.
5. Place the furniture so the back edge is in line with the bracket on the wall.
6. Lace an end of the nylon zip-tie strap down through each bracket. Bring both ends together and slide the smooth side upright through the square-shaped end and pull through to create the "locked" position.
7. Check to make sure the strap is securely laced and locked to the brackets.

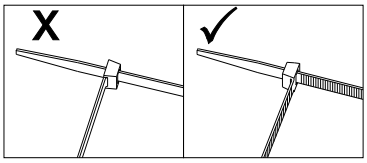

- **DO NOT** place heavy objects in top drawers or on top shelves
- **DO NOT** let children climb or hang on drawers, doors or shelves