ITEM: 9000-1302

Overall Dimensions

Height: 29.75″
Diameter: 24″

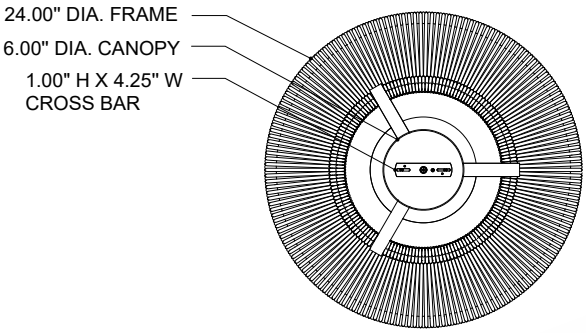

TOP VIEW

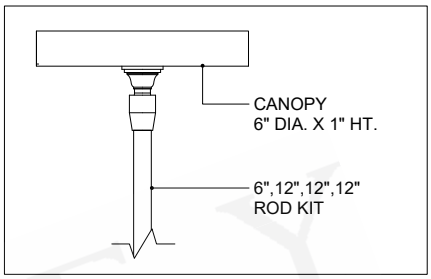

CANOPY DETAIL

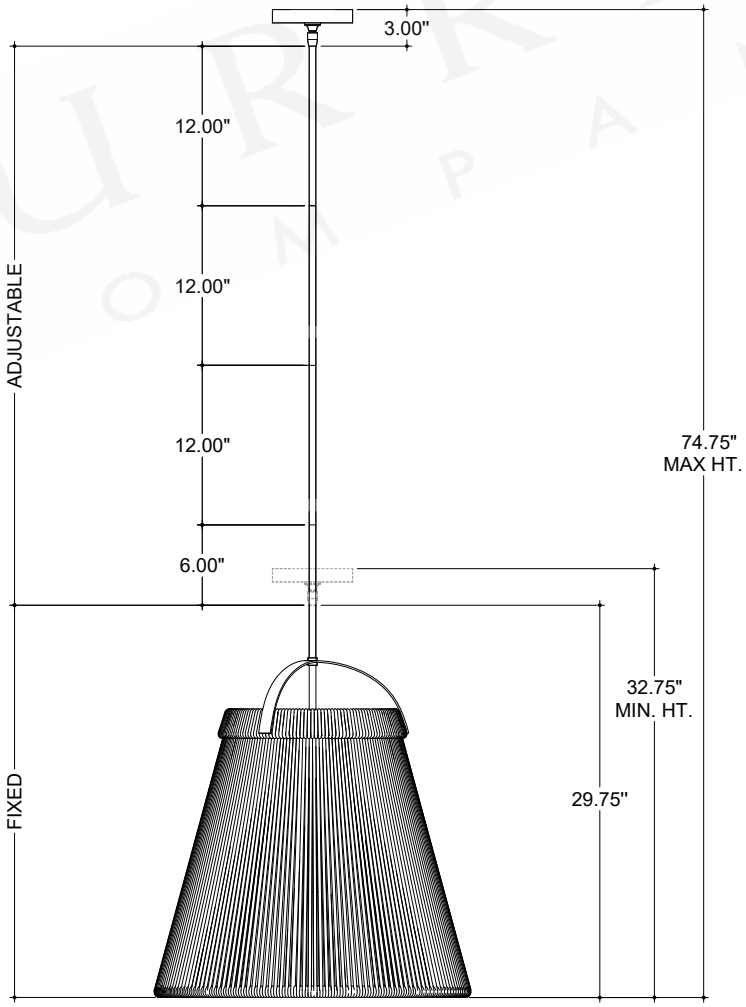

FRONT VIEW

ALL WORK © CURREY & COMPANY