REV.	DESCRIPTION	DESIGNER	DATE

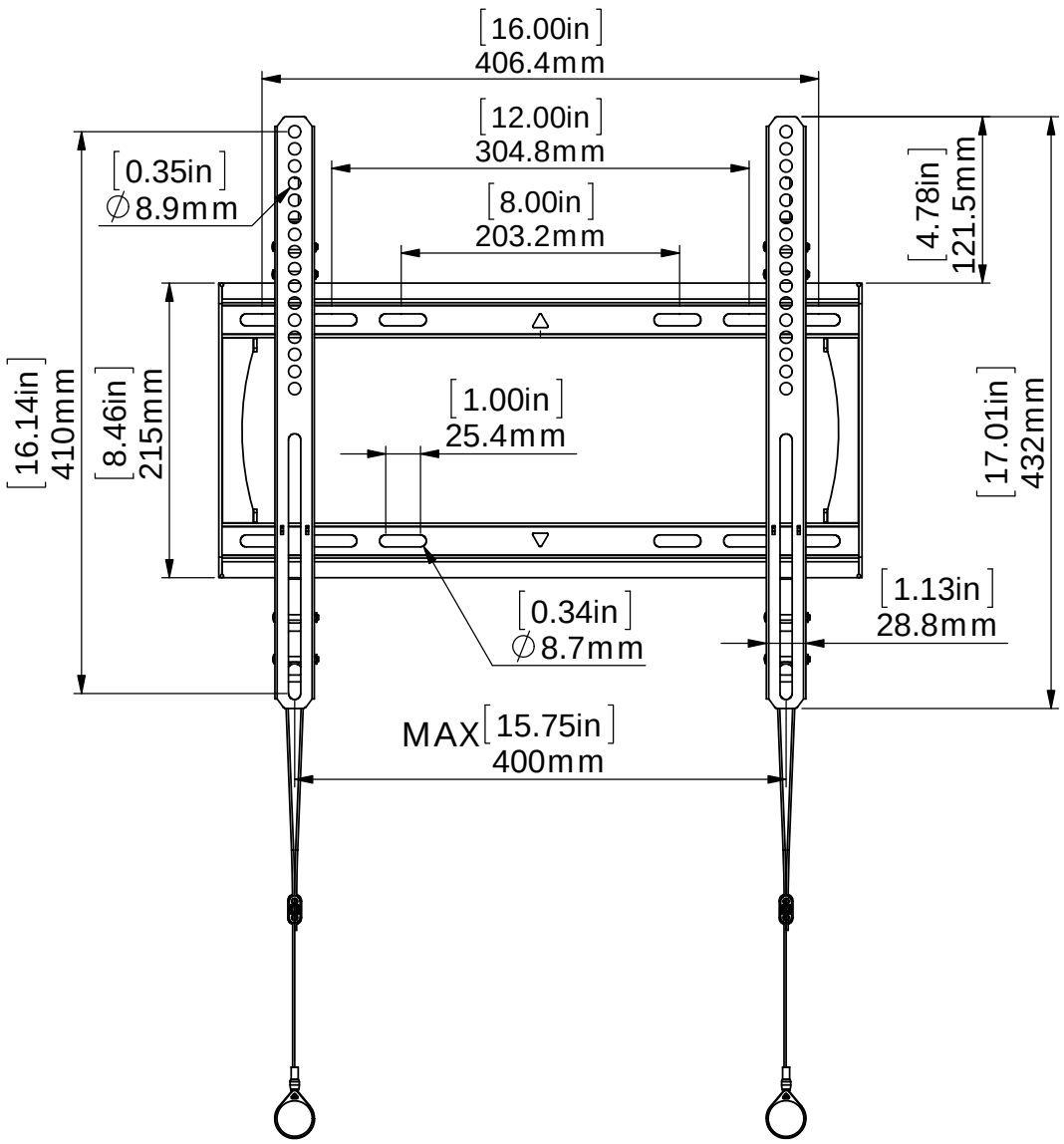

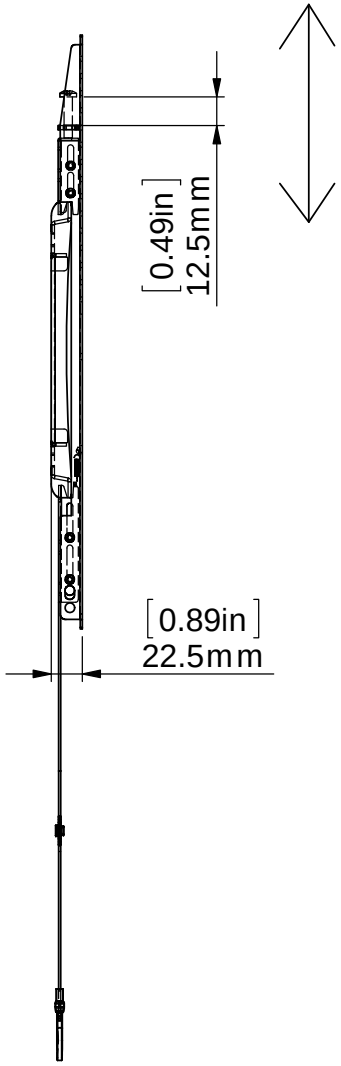

TOLERANCE: GB/T 1804-2000 Middling		
DIMENSION	Ubiety	Angle
0 ~ 29	±0.15	±1°
30 ~ 119	±0.3	±0.5°
120 ~ 399	±0.5	±0.3°
400~ 1000	±0.8	±0.2°
>1000	±1.2	±0.1°
UNLESS OTHERWISE SPECIFIED		

DESIGN

CHECKED

APPROVED

Mat

Scale

Unit mm

THIRD ANGLE PROJECTION

MODEL
BRKT FLT3260FULL-LVL HJ

Prat name
网页线图

DRAWING NUMBER

REV.
NR

第 1 页 共 1 页