SHIMANO

SPHEROS

SP-SW10000PG

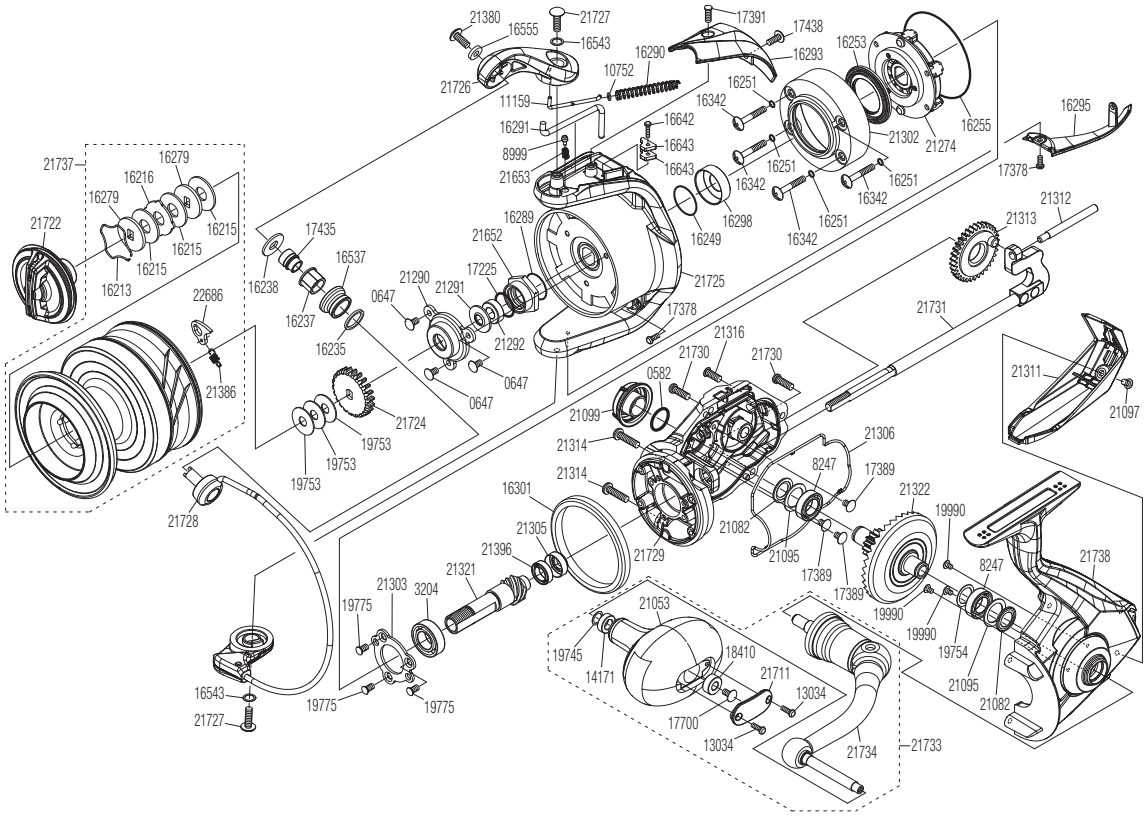

Please note that the number of adjusting washers may not always be the same as shown in the exploded views.

(51SF53R101X) Please note that your actions take full responsibility when you take it apart.

#	Part No.	Description	#	Part No.	Description	#	Part No.	Description
0582	108WH	O Ring	17225	1090A	O Ring	21380	10PMW	Screw
0647	10QG5	Screw	17378	10L1R	Screw	21386	10PH2	Drag Click Spring
3204	10BGA	Ball Bearing	17389	10LHN	Screw	21396	10S63	Ball Bearing
8247	104PR	Ball Bearing	17391	10LFK	Screw	21652	100KF	Rotor Nut
8999	10HEA	Click Pin	17435	10R3S	Collar	21653	10HEL	Click Spring
10752	10TYE	Spring Guide A Support Collar	17438	10LFF	Screw	21711	10SVU	Handle Knob ID Plate
11159	105LV	Bail Spring Guide A	17700	10LFA	Screw	21722	10SKQ	Drag Knob Assembly
13034	103NJ	Screw	18410	10EU0	Bushing	21724	10SGV	Spool Support
14171	104UJ	Bushing	19745	104FH	Washer	21725	10SKJ	Rotor
16213	10B8Q	Retainer	19753	101DJ	Spool Washer	21726	10SWX	Bail Arm
16215	10348	Drag Washer	19754	10DKJ	Washer	21727	10TXJ	Screw
16216	102Z9	Eared Washer	19775	100WY	Screw	21728	10TL0	Bail Assembly
16235	1072L	Spacer	19990	1055H	Screw	21729	10TL6	Body Assembly
16237	107RP	Bushing	21053	10R8C	Handle Knob Assembly	21730	10SGK	Screw
16238	107X5	Washer	21082	10TGJ	Bearing Water Proof	21731	10SZ0	Main Shaft Assembly
16249	108WV	O Ring	21095	10BGF	Washer	21733	10SKC	Handle Assembly
16251	108WW	O Ring	21097	10LHR	Screw	21734	10TL1	Handle Shank Assembly
16253	10MH2	Roller Clutch Water Proof	21099	101HW	Handle Screw Cap	21737	10SKH	Spool Assembly
16255	108WX	O Ring	21274	10TCX	Roller Clutch Assembly	21738	10S3E	Side Cover Assembly
16279	10BC9	Key Washer	21290	10E3R	Rotor Nut Lock Plate	22686	13YDN	Drag Click
16289	108WT	O Ring	21291	10E3Q	Bearing Water Proof			
16290	105LL	Bail Spring	21292	10E40	Spacer			
16291	106KN	Bail Trip Lever	21302	10E3J	Clutch Water Proof Cover			
16293	10880	Bail Spring Cover	21303	10E49	Bearing Retainer			
16295	10MND	Bail Hold Support Guard	21305	10E3P	Bushing			
16298	10K7S	Rotor Ring	21306	10E3M	Body Seal			
16301	104G8	Friction Ring	21311	1002R	Rear Protector			
16342	10A6S	Screw	21312	10E3V	Oscillating Guide			
16537	10KXY	Line Roller	21313	10E46	Oscillating Gear			
16543	10G4W	Washer	21314	10L9U	Screw			
16555	10684	Counter Weight	21316	10E47	Screw			
16642	10LSG	Screw	21321	10E4P	Pinion Gear			
16643	107EU	Counter Weight B	21322	10E57	Drive Gear Assembly			