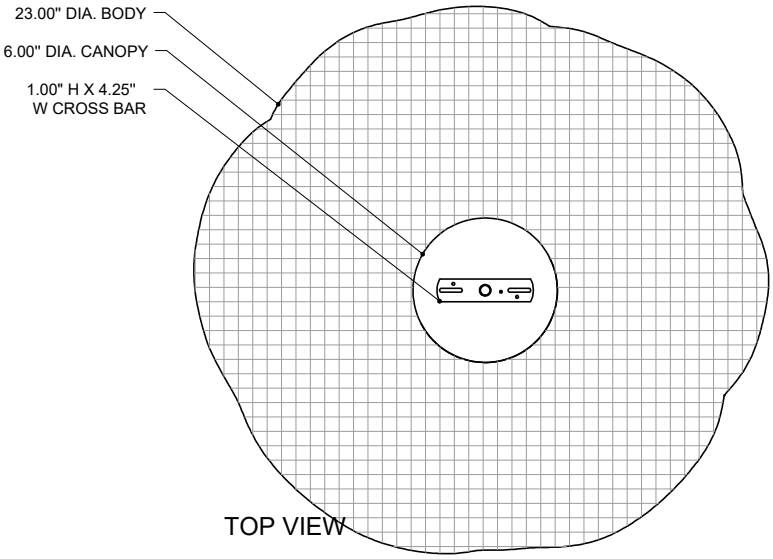

TOP VIEW

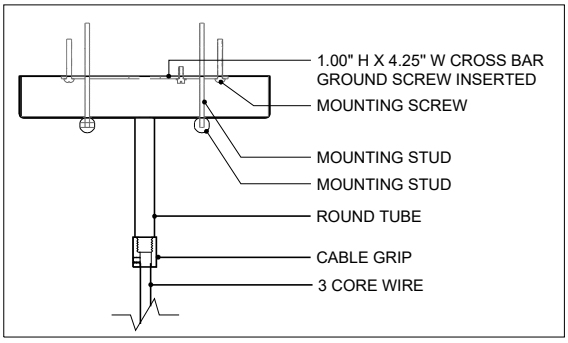

CANOPY DETAIL

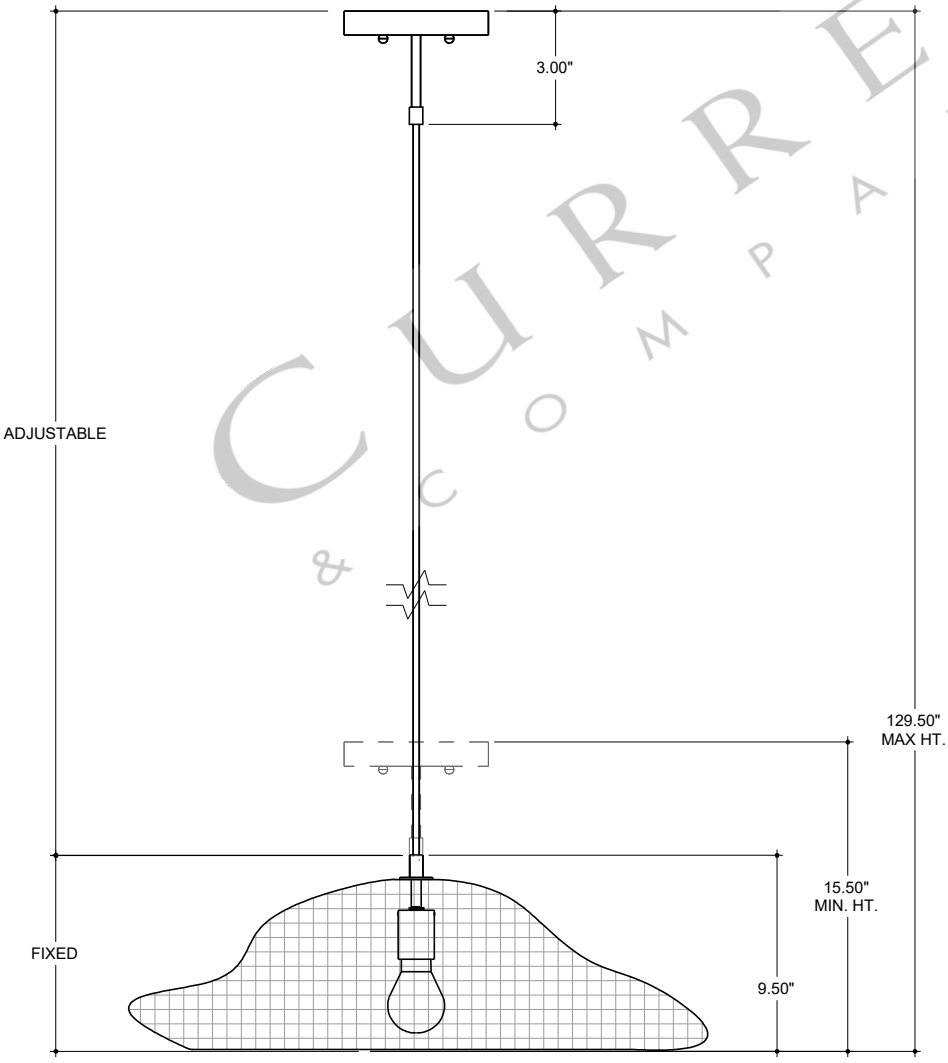

FRONT VIEW

CURREY & COMPANY

9000-0787

ALL WORK © 2021 CURREY & COMPANY