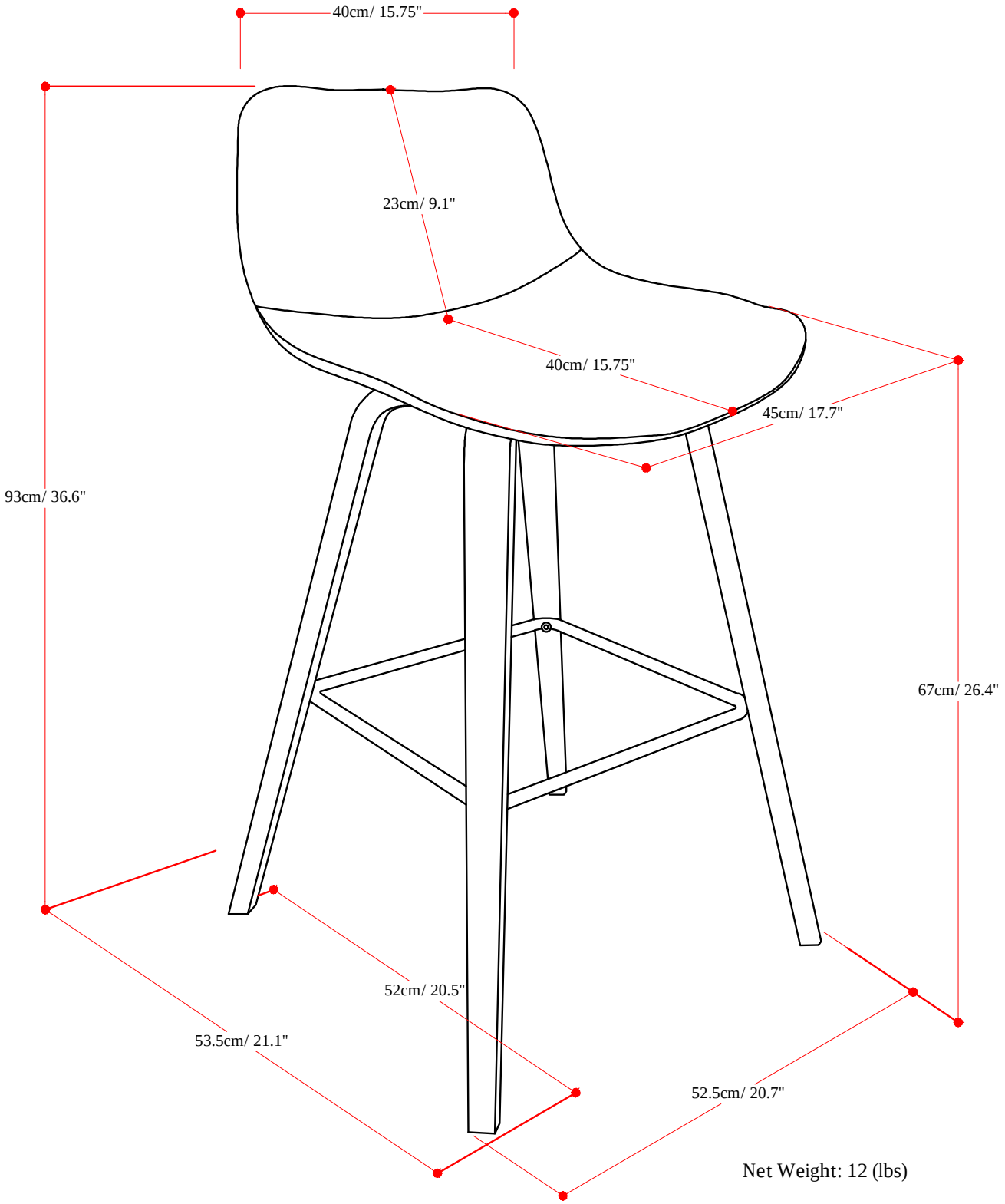

Net Weight: 12 (lbs)