umbra

1" SINGLE ROD | ¾" SINGLE ROD
36-72" (91-183 cm)
umbra.com

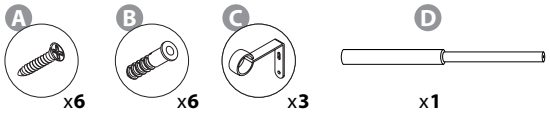

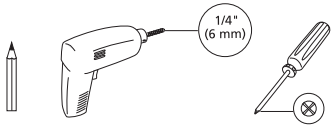

1

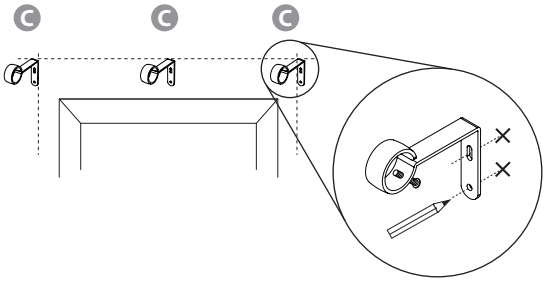

2

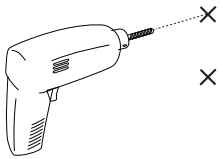

3

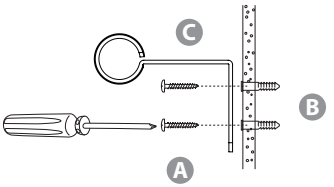

4

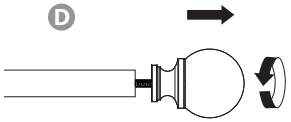

5

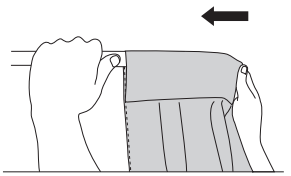

6

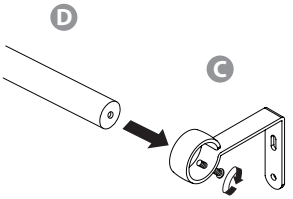

7

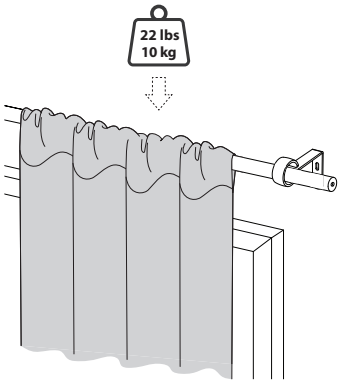
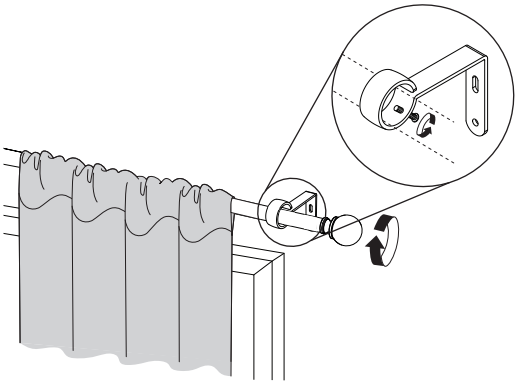
8