QZLS-3322

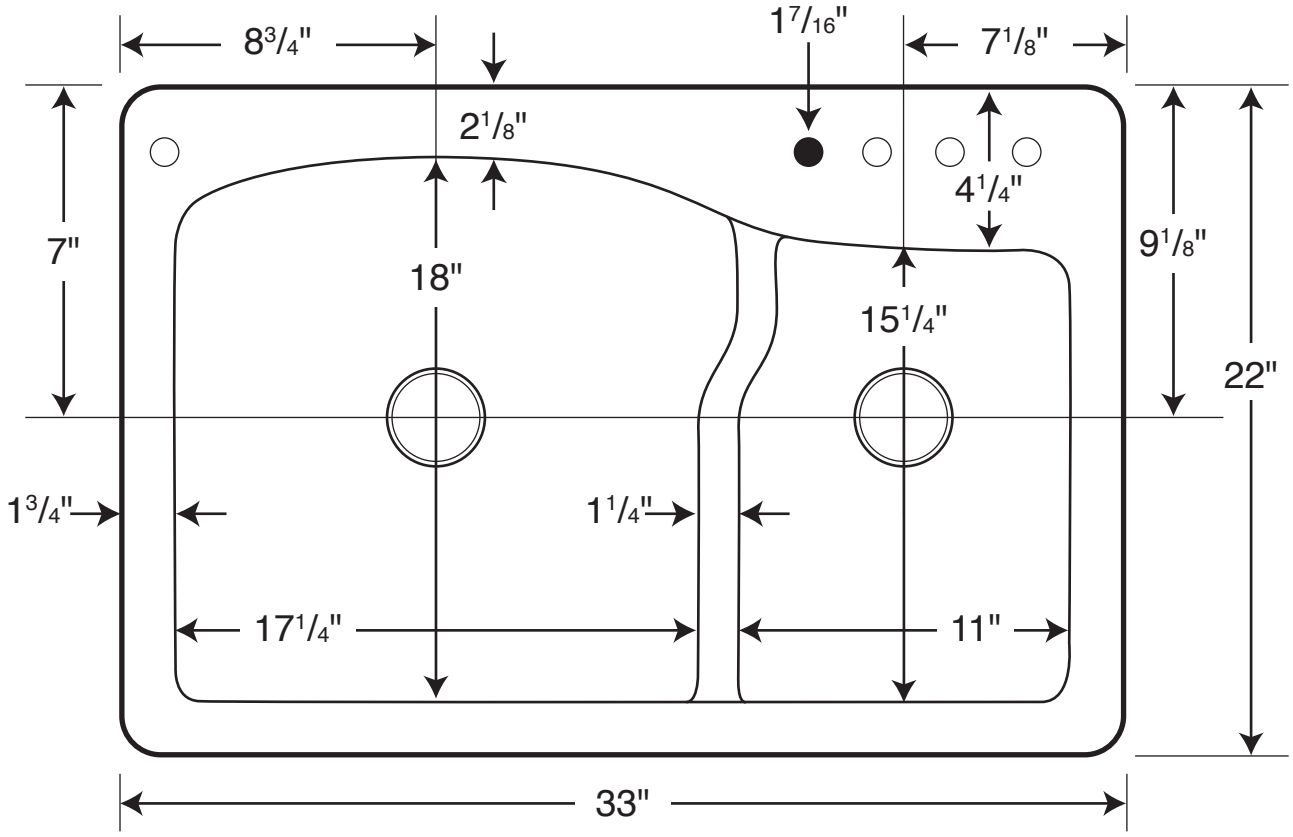
8 3/4"
1 7/16"
7 1/8"
2 1/8"
4 1/4"
7"
18"
15 1/4"
9 1/8"
22"
1 3/4"
1 1/4"
17 1/4"
11"
33"

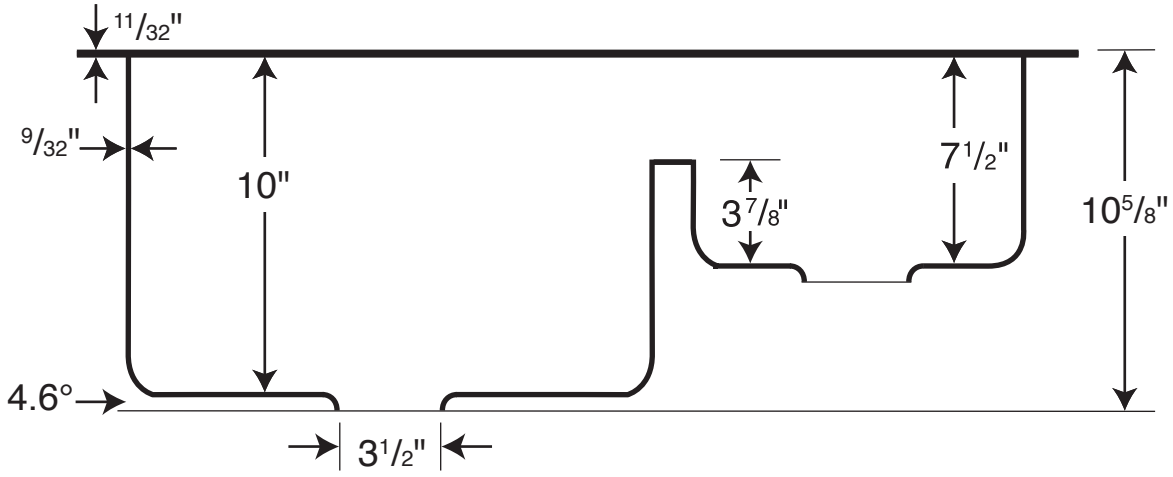
11/32"
9/32"
10"
7 1/2"
3 7/8"
10 5/8"
4.6°
3 1/2"