SHIMANO

ULTEGRA

ULT-C5000XGFB

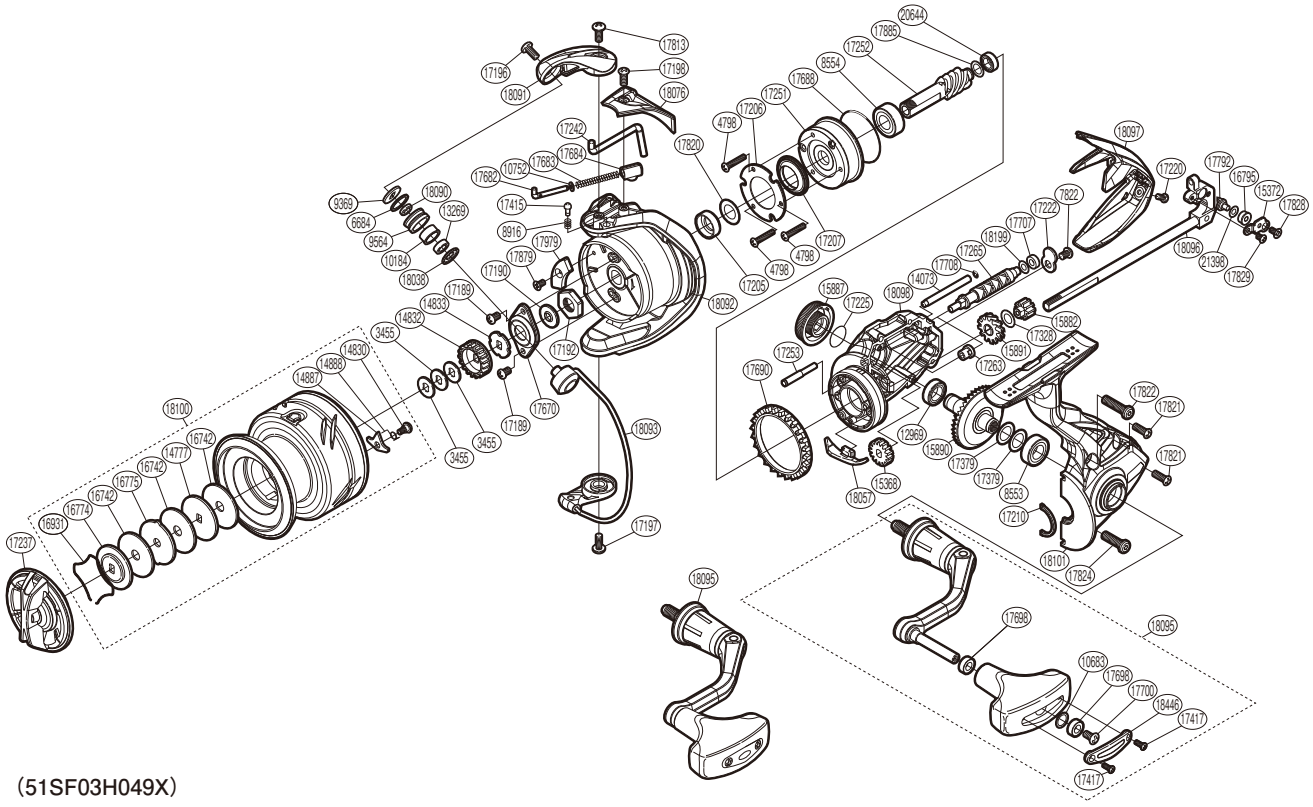

(51SF03H049X)

#	Part No.	Description	#	Part No.	Description	#	Part No.	Description
3455	10BXN	Spool Washer	17189	10PMC	Screw	17707	106CN	Worm Bushing
4798	103C6	Screw	17190	107L4	Bearing Water Proof	17708	10JAC	O Ring
6684	10KFD	Line Roller Spacer	17192	1067Y	Rotor Nut	17792	106UZ	Oscillating Pawl
7822	103KW	Screw	17196	10PS8	Screw	17813	10DN9	Screw
8553	107AT	Ball Bearing	17197	10PS5	Screw	17820	10GR6	Washer
8554	107FE	Ball Bearing	17198	10PS7	Screw	17821	10LZG	Screw
8916	10CH0	Click Spring	17205	10JHG	Rotor Ring	17822	10DNB	Screw
9369	10PFP	Washer	17206	10L62	Roller Clutch Reinforce	17824	10DNC	Screw
9564	10JLE	Line Roller	17207	10MH6	Roller Clutch Water Proof	17828	10QVK	Screw
10184	10PFH	Line Roller Bushing	17210	10CBD	Flange Water Proof	17829	10L67	Screw
10683	10HTT	Washer	17220	10PRZ	Screw	17879	10LA3	Screw
10752	10TYE	Bail Spring Guide A Support	17222	10ATJ	Worm Shaft Retainer	17885	10HEP	Washer
12969	107FA	Ball Bearing	17225	1090A	O Ring	17979	106GA	Counter Weight A
13269	104VX	Ball Bearing	17237	10H03	Drag Knob	18038	101ZK	Line Roller Support (B)
14073	10337	Oscillating Guide	17242	106P4	Bail Trip Lever	18057	107E0	Bail Trip Strike
14777	10QBT	Key Washer	17251	10QPN	Roller Clutch Assembly	18076	101ZH	Bail Spring Cover
14830	10PH5	Screw	17252	10C53	Pinion Gear	18090	1019L	Bearing Spacer
14832	103MU	Spool Support A	17253	10CLE	Idle Gear B Shaft	18091	1018V	Bail Arm
14833	10J04	Spool Support B	17263	106MB	Worm Bushing (Front)	18092	10TVC	Rotor
14887	1038D	Drag Click	17265	1068J	Worm Shaft	18093	10TVN	Bail Assembly
14888	10JM5	Click Spring	17328	10B7U	Washer	18095	1019K	Handle Assembly
15368	10HBH	Idle Gear	17379	10GR3	Washer	18096	10SKL	Main Shaft Assembly
15372	10HAE	Oscillating Pawl Cover	17415	106ZC	Click Pin	18097	1018U	Rear Protector
15882	106RH	Idle Gear B (Small)	17417	10L1T	Screw	18098	1019M	Body
15887	10N3S	Handle Screw Cap	17670	10TRH	Rotor Nut Lock Plate	18100	101LW	Spool Assembly
15890	10AAV	Drive Gear	17682	1061L	Bail Spring Guide A	18101	10TW9	Side Cover
15891	10CNR	Idle Gear B (Large)	17683	105R6	Bail Spring	18199	10ECK	Washer
16742	10C1A	Drag Washer	17684	107AB	Bail Spring Seat	18446	10TY1	Handle Knob I.D. Plate
16774	10BCE	Key Washer	17688	10MLU	O Ring	20644	10RKR	Ball Bearing
16775	102ZD	Eared Washer	17690	104FV	Friction Ring	21398	10RKQ	Washer
16795	10JXT	Oscillating Slider Bushing	17698	10PXZ	Handle Knob Bushing			
16931	10B8N	Drag Washers Retainer	17700	10LFA	Screw	18054	10G4L	Anti Line Slip Sticker

Please note that the number of adjusting washers may not be the same as shown in the exploded views.
(Adjustment will vary with each individual product.)