DS-2CE57U8T-VPIT
4K Ultra-Low Light Dome Camera

Key Features

- 8.29 MP high performance CMOS
- Ultra-low light
- 3840 × 2160 resolution
- 2.8 mm, 3.6 mm, 6 mm fixed focal lens
- 120 dB true WDR, 3D DNR
- EXIR 2.0, smart IR, up to 40 m IR distance
- IP67, IK10
- Up the coax (HIKVISION-C)

Specification

Camera	
Image Sensor	8.29 megapixel progressive scan CMOS
Signal System	PAL/NTSC
Frame Rate	PAL: 8 MP@12.5fps, 5 MP@20fps, 4 MP@25fps, 1080p@25fps NTSC: 8 MP@15fps, 5 MP@20fps, 4 MP@30fps, 1080p@30fps
Resolution	3840 (H) × 2160 (V)
Min. illumination	Color: 0.003 Lux@(F1.2, AGC ON), 0 Lux with IR
Shutter Time	PAL: 1/12.5 s to 1/10,000 s NTSC: 1/15 s to 1/10,000 s
Slow Shutter	Max. 16 times
Lens	2.8 mm, 3.6 mm, 6 mm fixed focal lens
Horizontal Field of View	102.2° (2.8 mm), 79° (3.6 mm), 50.8° (6 mm)
Lens Mount	M12
Day & Night	IR cut filter
Angle Adjustment	Pan: 0° to 355°, Tilt:0° to 75°, Rotate: 0° to 355°
Synchronization	Internal synchronization
WDR (Wide Dynamic Range)	120 dB
Menu	
AGC	Support
Day/Night Mode	Auto/Color/BW (Black and White)
White Balance	Auto/Manual/Natural
Privacy Mask	ON/OFF, 4 programmable privacy masks
BLC (Backlight Compensation)	Support
3D DNR (Digital Noise Reduction)	Level 1 to 10
Language	English
Functions	Contrast, Sharpness, Saturation, Mirror, Defog, HLC
Interface	
TVI Video Output	1 HD analog output
CVBS Video Output	1 CVBS output (75Ω/BNC)
General	
Operating Conditions	-40 °C to 60 °C (-40 °F to 140 °F), humidity: 90% or less (non-condensation)
Power Supply	12 VDC ±25% **You are recommended to use one power adapter to supply the power for one camera.*
Power Consumption	Max. 4.8 W
Protection Level	IP67, IK10
Material	Metal
IR Range	Up to 40 m
Communication	Up the coax, Protocol: HIKVISION-C (TVI output)
Dimensions	Φ 110.8 mm × 84.7 mm (Φ 4.4" × 3.3")
Weight	Approx. 450 g (0.99 lb.)

Order Models

DS-2CE57U8T-VPIT

Dimension

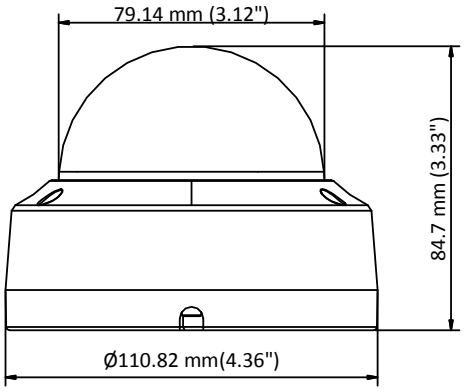

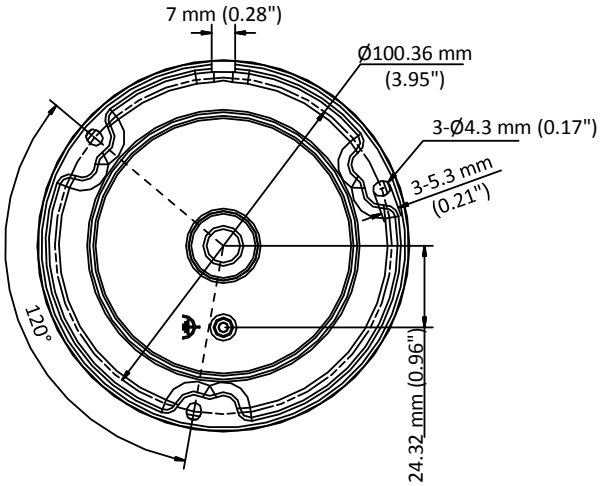

Accessory

DS-1259ZJ
Inclined Ceiling Mount

DS-1271ZJ-110
Pendant Mount

DS-1272ZJ-110B
Wall Mount

DS-1275ZJ-SUS
Vertical pole mount

Distributed by

DS-1280ZJ-DM18
Junction Box

DS-1258ZJ
Wall Mount

DS-1H18
Video Balun

Headquarters
No.555 Qianmo Road, Binjiang District,
Hangzhou 310051, China
T +86-571-8807-5998
overseasbusiness@hikvision.com

Hikvision USA
T +1-909-895-0400
sales.usa@hikvision.com

Hikvision Europe
T +31-23-5542770
sales.eu@hikvision.com

Hikvision UK & Ireland
T +01628-902140
sales.uk@hikvision.com

Hikvision UAE
T +971-4-4432090
salesme@hikvision.com

Hikvision Russia
T +7-495-669-67-99
saleru@hikvision.com

Hikvision Australia
T +61-2-8599-4233
salesau@hikvision.com

Hikvision Italy
T +39-0438-6902
info.it@hikvision.com

Hikvision South Africa
Tel: +27 (10) 0351172
sale.africa@hikvision.com

Hikvision Singapore
T +65-6684-4718
sg@hikvision.com

Hikvision Korea
T +82-(0)31-731-8817
sales.korea@hikvision.com

Hikvision India
T +91-22-28469900
sales@pramahikvision.com

Hikvision Brazil
T +55 11 3318-0050
Latam.support@hikvision.com

Hikvision France
T +33(0)1-85-330-450
info.fr@hikvision.com

Hikvision Spain
T +34-91-737-16-55
info.es@hikvision.com

Hikvision Poland
T +48-22-460-01-50
info.pl@hikvision.com

Hikvision Canada
T +1-866-200-6690
sales.canada@hikvision.com

Hikvision Turkey
T +90 (216)521 7070- 7074
sales.tr@hikvision.com

Hikvision Kazakhstan
T +7-727-9730667
nikia.panfilov@hikvision.ru

Hikvision Tashkent
T +99-87-1238-9438
uzb@hikvision.ru

Hikvision Indonesia
T +62-21-2933759
Sales.Indonesia@hikvision.com

Hikvision Thailand
T +662-275-9949
sales.thailand@hikvision.com

Hikvision Malaysia
T +601-7652-2413
sales.my@hikvision.com

Hikvision Vietnam
T +84-974270888
sales.vt@hikvision.com

Hikvision Hong Kong
T +852-2151-1761
info.hk@hikvision.com

Hikvision Colombia
sales.colombia@hikvision.com

© Hikvision Digital Technology Co., Ltd. 2020 | Data subject to change without notice |