ASSEMBLY INSTRUCTIONS

Ulani 2pk Coffee Table Set Wood Top and Metal Top

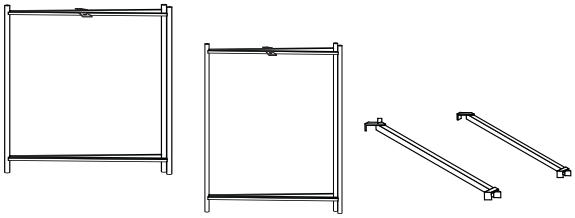

1 PC LARGE STAND

1 PC SMALL STAND

1 PC LARGE BAR
1 PC SMALL BAR

X1

Allan Key

2+1 EXTRA

Allan Screws

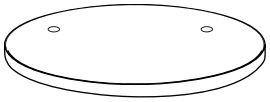

1 PC LARGE WOODEN TOP

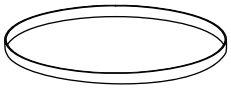

1 PC SMALL METAL TOP

STEP-1

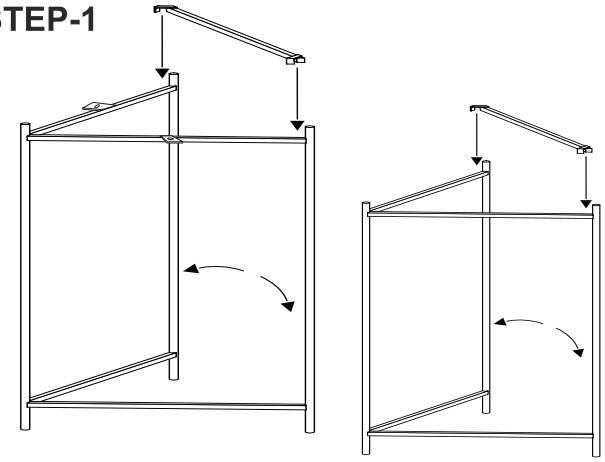

Unfold the stand and place the bar on the top as shown.

STEP-2

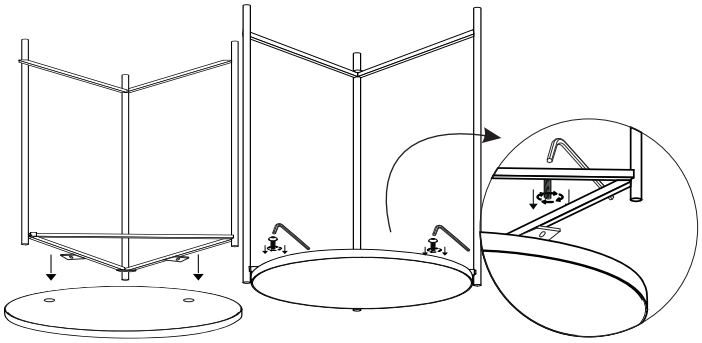

)RU/DUJHWDEOH.HHHeZRRG top up side down onD clean surface.
Align the tabs with wood nuts and secure with allen screwVDVVKRZQ

STEP 3

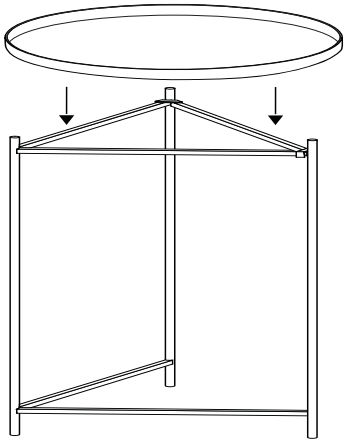

For Small table, place the metal tray top as shown.

Both tables are assembled and ready to use.

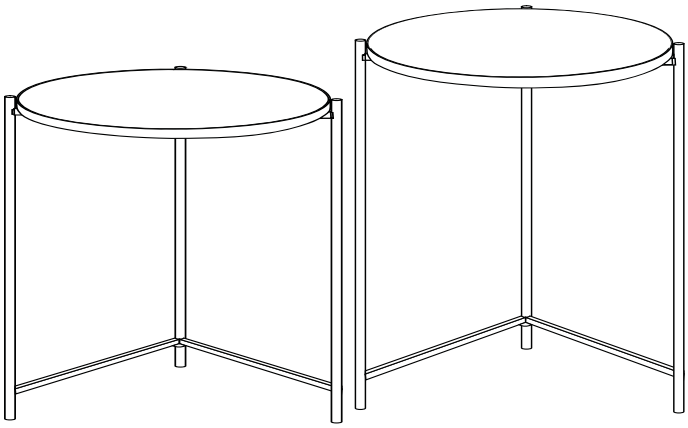

SMALL **LARGE**