Madison Technical Specification

European Paper Hold BP6980

Stock Numbers:

- **BP6980CH – European Paper Holder**
  Polished Chrome Finish
  Concealed Screw Mounting

- **BP6980OWB – European Paper Holder**
  Old World Bronze Finish
  Concealed Screw Mounting

Dimensions:

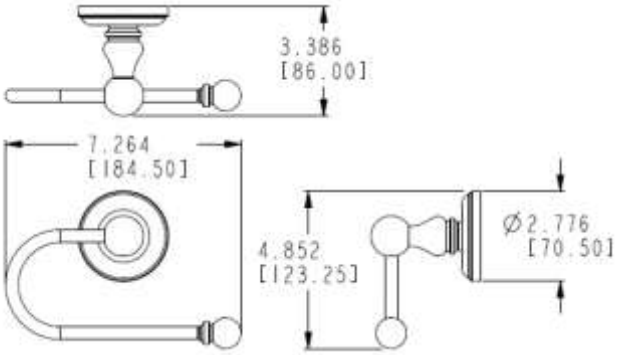

Materials:

European Paper Holder post is die cast from highest quality zinc alloy (zamac). Casting is plated with a polished chrome or old world bronze finish. Roller arm and roller arm cap are aluminum.

Installation Instructions:

1. Mounting hardware is included in the packaging.
2. Remove the mounting bracket from the back of fixture by loosening the set screw.
3. Position the base on wall where desired.
4. Lightly mark the outline of the base(s).
5. Center mounting bracket in the outline. Position the square end to face up.
6. Mark the location of each hole. Screw into a wood stud or use the provided toggle bolts.
7. Mount the base on the bracket. Plece the fixture on the mounting bracket and tighten the set screw on the bottom

Cleaning Instructions:

To preserve the fine finish of this product, clean only with a soft damp cloth. Dry well. Do not use commercial or abrasive cleaners.

Stock Number:_____European Paper Holder By Creative Specialties

Creative Specialties® International
a Division of MOEN
Buy it for looks. Buy it for life.®

25300 AL MOEN DRIVE • NORTH OLMSTED, OH 44070
CORPORATE HEADQUARTERS: (800) 321-8809 • FAX: (800) 848-6636
INTERNATIONAL: (440) 962-2000 • FAX: (440) 962-2726
CUSTOMER SERVICE (USA): 800-882-0116 • FAX: (888) 379-2720
WWW.MOEN.COM
©Copyright Creative Specialties International
Literature #BA1486