SHIMANO

NASCI

NAS1000FD

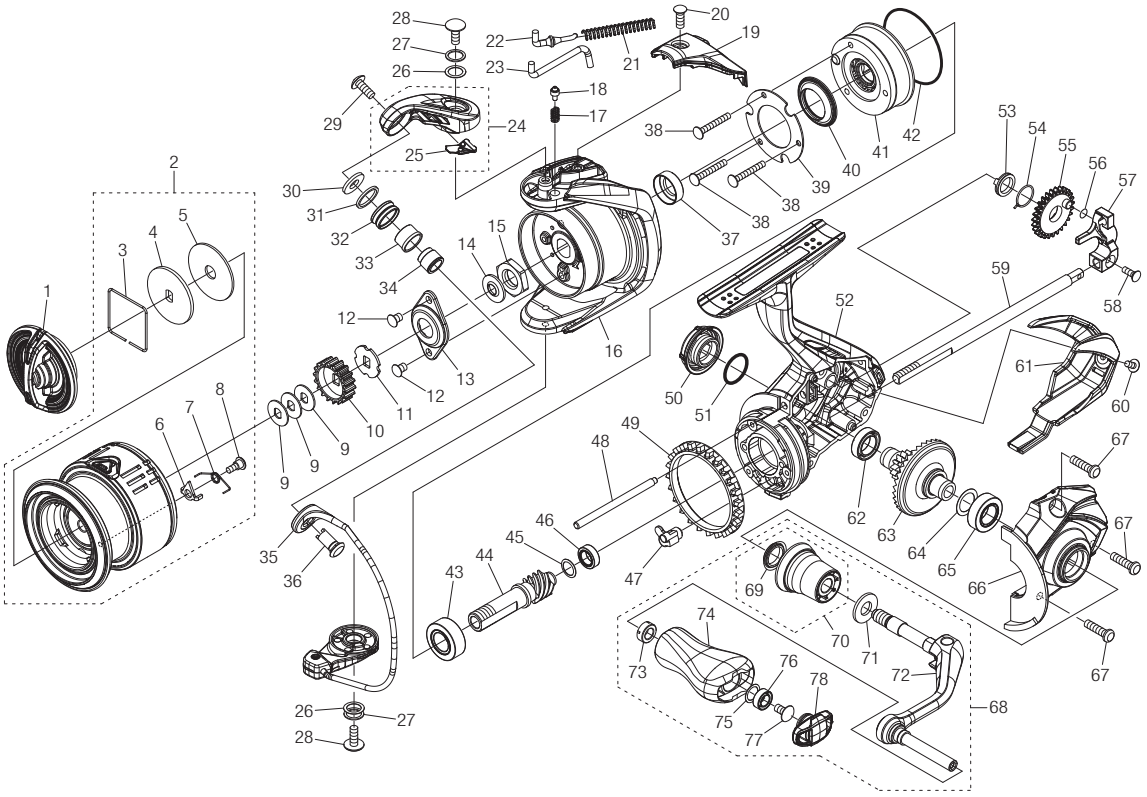

(51SF912B10X)

Please note that the number of adjusting washers may not be the same as shown in the exploded views.
(Adjustment will vary with each individual product.)

#	Part No.	RD No.	Description	#	Part No.	RD No.	Description	#	Part No.	RD No.	Description
1	101BU	21960	Drag Knob Assembly	30	107X1	17164	Washer	59	101SY	17960	Main Shaft
2	14BML		Spool Assembly	31	10KFD	6684	Spacer	60	10LCS	17863	Screw
3	10B87	7995	Retainer	32	10JLF	9368	Line Roller	61	10R9D	21970	Rear Protector
4	10N24	11913	Key Washer	33	10PFH	10184	Bushing	62	107FA	12969	Ball Bearing
5	10N5A	10345	Drag Washer	34	149ZC		Collar	63	101BZ	21971	Drive Gear
6	10DS4	21807	Drag Click	35	14CAF		Bail Assembly	64	10EEZ	21178	Washer
7	10DS6	21808	Drag Click Spring	36	149ZA		Line Roller Support	65	10DZB	19998	Ball Bearing
8	10TRB	17664	Screw	37	10JHG	17205	Rotor Ring	66	14BZE		Side Cover
9	10BXN	3455	Spool Washer	38	103C6	4798	Screw	67	10L6K	17916	Screw
10	103MU	14832	Spool Support A	39	10L62	17206	Roller Clutch Reinforce	68	14BMW		Handle Assembly
11	10J04	14833	Spool Support B	40	10MH6	17207	Roller Clutch Water Proof	69	10PXV	17695	Handle Shaft Seal
12	10PMC	17189	Screw	41	10QPN	17251	Roller Clutch Assembly	70	10TSE	22469	Handle Shaft Cover Assembly
13	10TRH	17670	Nut Lock Plate	42	10MLU	17688	O Ring	71	10E5X	20170	Washer
14	107L4	17190	Bearing Water Proof	43	10E7A	21224	Ball Bearing	72	14CAH		Handle Shank Assembly
15	1067Y	17192	Rotor Nut	44	14BMV		Pinion Gear	73	10PXZ	17698	Bushing
16	14AYG		Rotor	45	10SYU	18741	Washer	74	10328	17699	Handle Knob
17	10CH0	8916	Click Spring	46	10RKR	20644	Ball Bearing	75	104FH	19745	Washer
18	106ZC	17415	Click Pin	47	149ZL		Anti Reverse Cam	76	10K64	21823	Ball Bearing
19	14AYH		Bail Spring Cover	48	101BN	21966	Oscillating Guide	77	10LFA	17700	Screw
20	10LFK	17391	Screw	49	104FV	17690	Friction Ring	78	10TNJ	17701	Handle Knob Seal
21	10FVB	9366	Bail Spring	50	10RSE	20156	Handle Screw Cap				
22	105LS	9365	Bail Spring Guide	51	10E3K	20139	O Ring				
23	106L0	17963	Bail Trip Lever	52	14CAG		Body Assembly				
24	14CAE		Bail Arm Assembly	53	10TBH	21815	Bushing				
25	14BMR		Bail Arm Fin	54	10RPB	22418	Bushing Spring				
26	10KFA	11166	Washer	55	101BV	21967	Oscillating Gear				
27	10K96	18551	Washer	56	101BW	21968	O Ring				
28	103DA	20370	Screw	57	101BP	21969	Oscillating Slider				
29	10PMH	18681	Screw	58	10R1P	17332	Screw				