GKB981,2,5,8FL

Widespread Lavatory Faucet With Retail Pop-Up

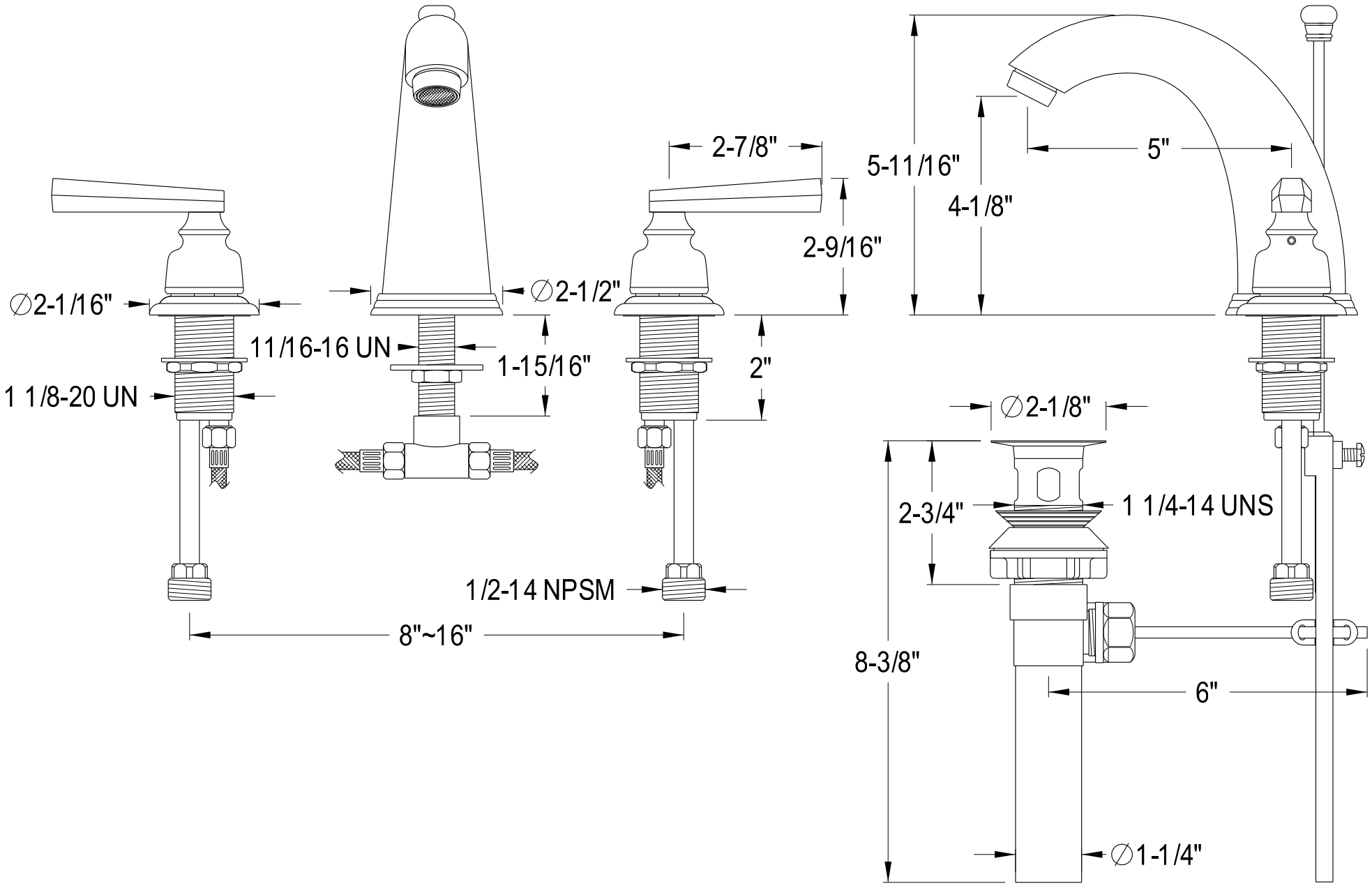

Ref# GKB981,2,5,8FL | 2017-07-C