ITEM: 6000-0968

Overall Dimensions

Height:36.75″
Diameter: 23″

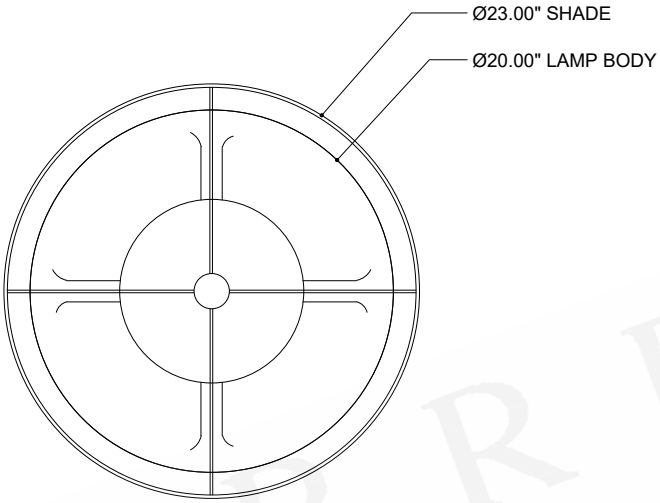

TOP VIEW

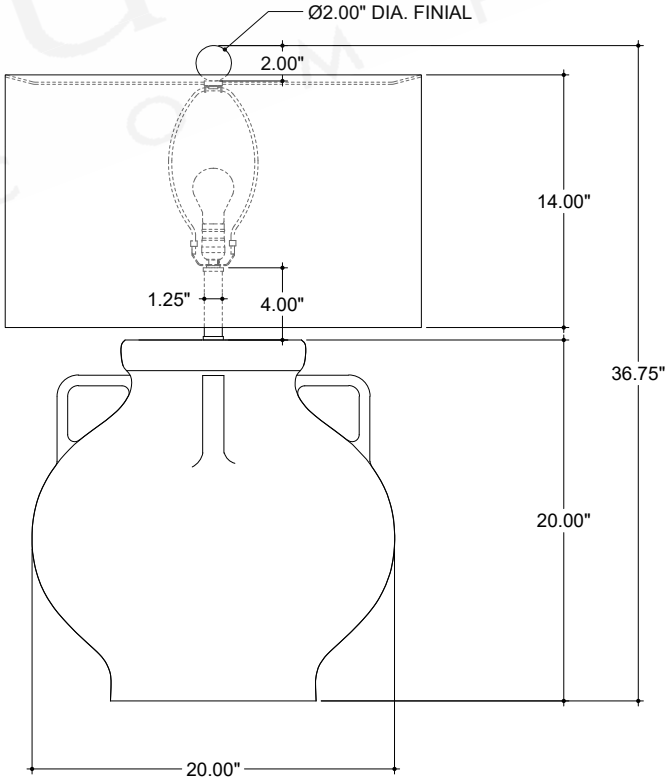

FRONT VIEW

ALL WORK © CURREY & COMPANY