SHIMANO

TWIN POWER SA-RB

TP-SW10000PG

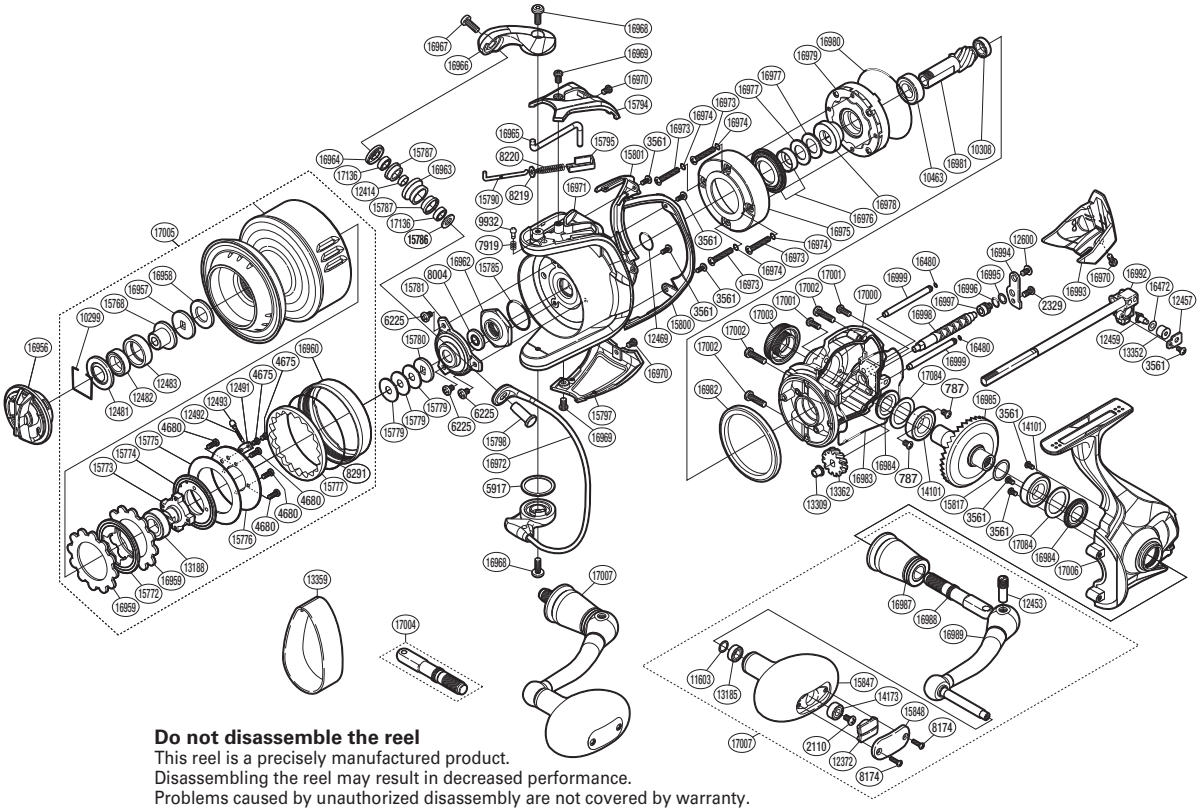

Do not disassemble the reel
This reel is a precisely manufactured product.
Disassembling the reel may result in decreased performance.
Problems caused by unauthorized disassembly are not covered by warranty.

Please note that the number of adjusting washers
may not be the same as shown in the exploded views.
(51SE51R104X) (Adjustment will vary with each individual product.)

Part No.	Description	Part No.	Description	Part No.	Description
RD 0787	Screw	RD15768	Bearing Support	RD16971	Rotor
RD 2110	Screw	RD15772	Spool Drag Disk	RD16972	Bail Assembly
RD 2329	Screw	RD15773	Bearing Bushing	RD16973	Screw
RD 3561	Screw	RD15774	Spool Drag Disk	RD16974	O Ring
RD 4675	Screw	RD15775	Bearing Water Proof	RD16975	Roller Clutch Water Proof Cover
RD 4680	Screw	RD15776	Drag Plate Washer	RD16976	Roller Clutch Water Proof Set
RD 5917	Washer	RD15777	Drag Click Ratchet	RD16977	Washer
RD 6225	Screw	RD15779	Spool Washer	RD16978	Roller Clutch Inner
RD 7919	Click Spring	RD15780	Spool Support	RD16979	Roller Clutch Assembly
RD 8004	Bearing Water Proof	RD15781	Nut Lock Plate	RD16980	O Ring
RD 8174	Screw	RD15785	O Ring	RD16981	Pinion Gear
RD 8219	Spring Guide A Support	RD15786	Line Roller Support Collar	RD16982	Friction Ring
RD 8220	Bail Spring	RD15787	Line Roller Bushing	RD16983	Body Seal
RD 8291	O Ring	RD15790	Bail Spring Guide A	RD16984	Bearing Water Proof
RD 9932	Click Pin	RD15794	Bail Spring Cover	RD16985	Drive Gear
RD10299	Drag Washers Retainer	RD15795	Bail Spring Seat	RD16987	Handle Shaft Cover
RD10308	Ball Bearing	RD15797	Bail Hold Support Guard	RD16988	Handle Shaft (left)
RD10463	Ball Bearing	RD15798	Line Roller Support	RD16989	Handle Shank Assembly
RD11603	Washer	RD15800	Rotor Guard A	RD16992	Main Shaft Assembly
RD12372	Handle Knob Seal	RD15801	Rotor Guard B	RD16993	Rear Protector
RD12414	Bearing Spacer	RD15817	Washer	RD16994	Worm Shaft Retainer
RD12453	Handle Shaft Screw	RD15847	Handle Knob	RD16995	Washer
RD12457	Oscillating Pawl Cover	RD15848	Handle Knob I.D. Plate	RD16996	O Ring
RD12459	Oscillating Pawl	RD16472	Washer	RD16997	Worm Bushing (rear)
RD12469	O Ring	RD16480	O Ring	RD16998	Worm Shaft
RD12481	Seal Plate	RD16956	Drag Knob	RD16999	Oscillating Guide
RD12482	Ball Bearing	RD16957	Key Washer	RD17000	Body
RD12483	Thrust Bushing	RD16958	Drag Washer	RD17001	Screw
RD12491	Click Spring Holder	RD16959	Drag Washer	RD17002	Screw
RD12492	Click Spring	RD16960	Drag Cover	RD17003	Handle Screw Cap
RD12493	Click Pin	RD16962	Rotor Nut	RD17005	Spool Assembly
RD12600	Screw	RD16963	Line Roller	RD17006	Side Cover
RD13185	Ball Bearing	RD16964	Line Roller Plate	RD17007	Handle Assembly
RD13188	Ball Bearing	RD16965	Bail Trip Lever	RD17084	Washer
RD13309	Worm Bushing (front)	RD16966	Bail Arm	RD17136	Ball Bearing
RD13352	Oscillating Slider Bushing	RD16967	Screw		
RD13362	Idle Gear	RD16968	Screw		
RD14101	Ball Bearing	RD16969	Screw	RD13359	Line Band (accessory)
RD14173	Ball Bearing	RD16970	Screw	RD17004	Handle Shaft (right) (accessory)