HURRICANE BASE ASSEMBLY

1

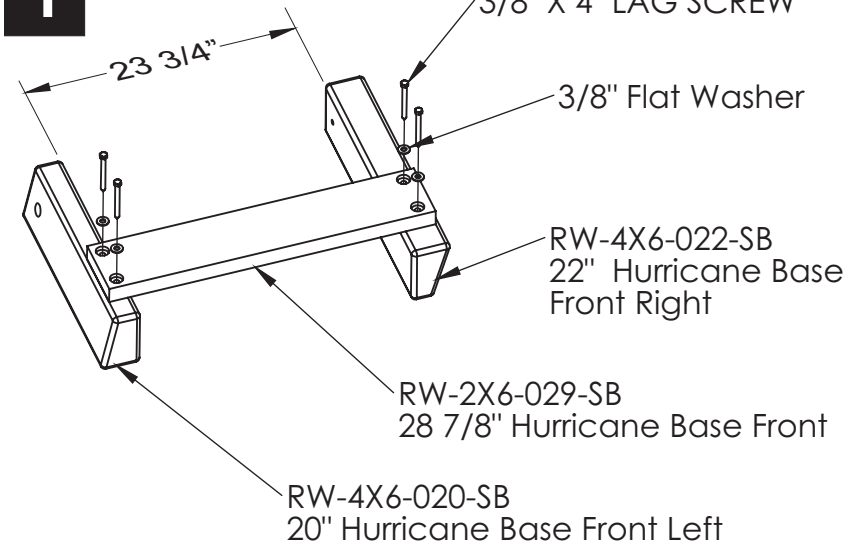

2

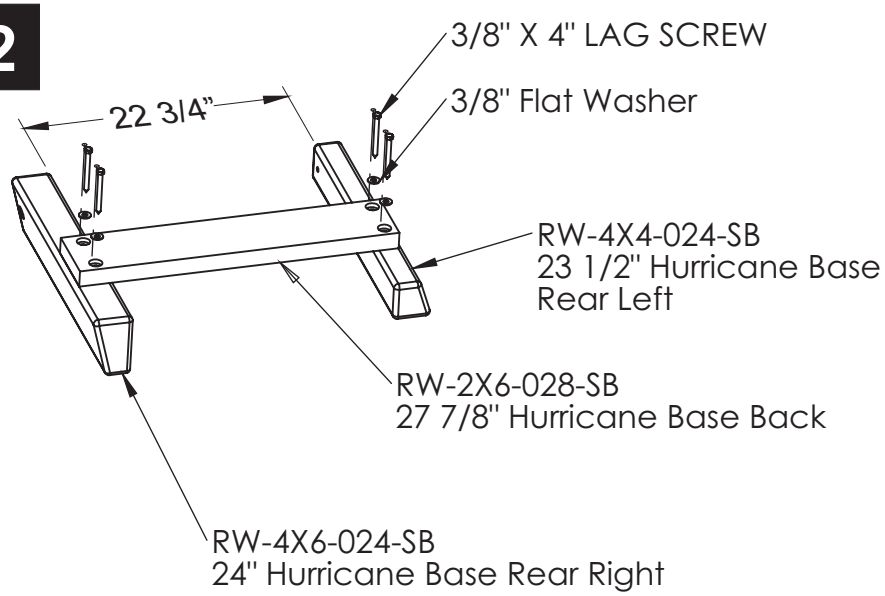

3

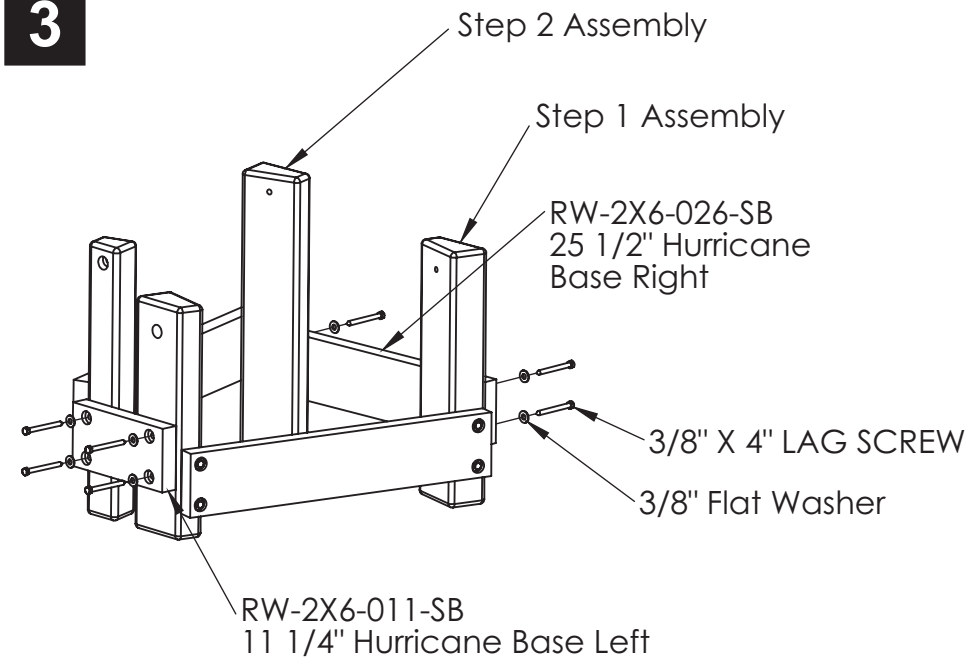
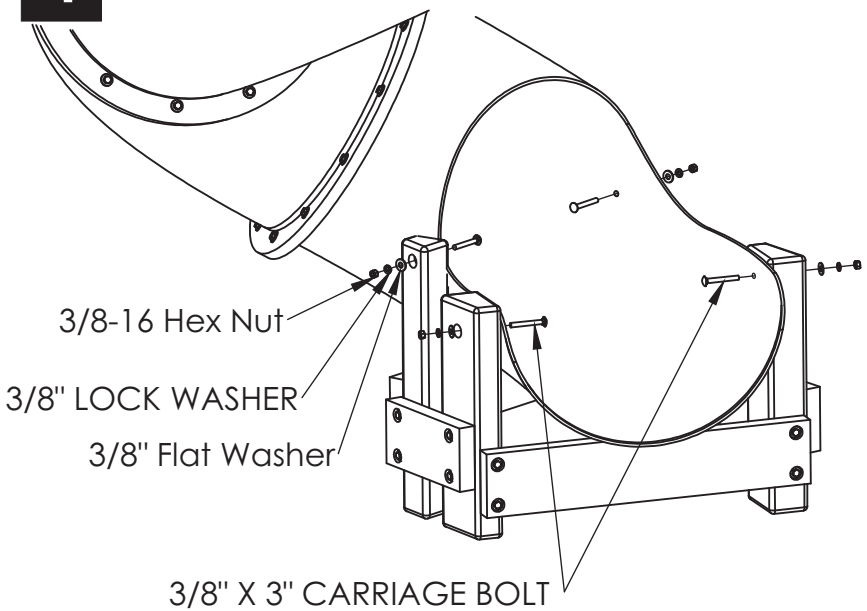
4