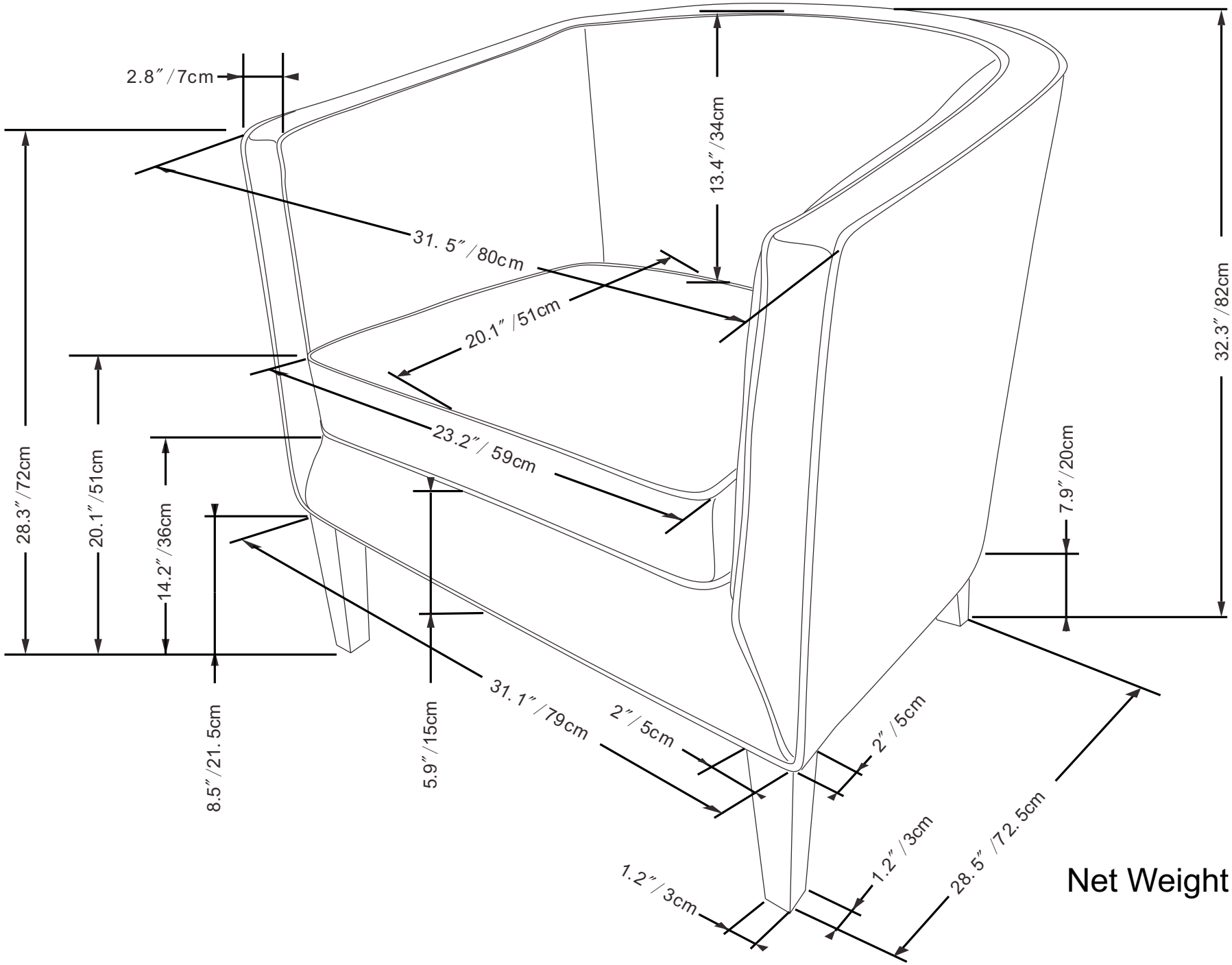

Net Weight - 39.6 lbs