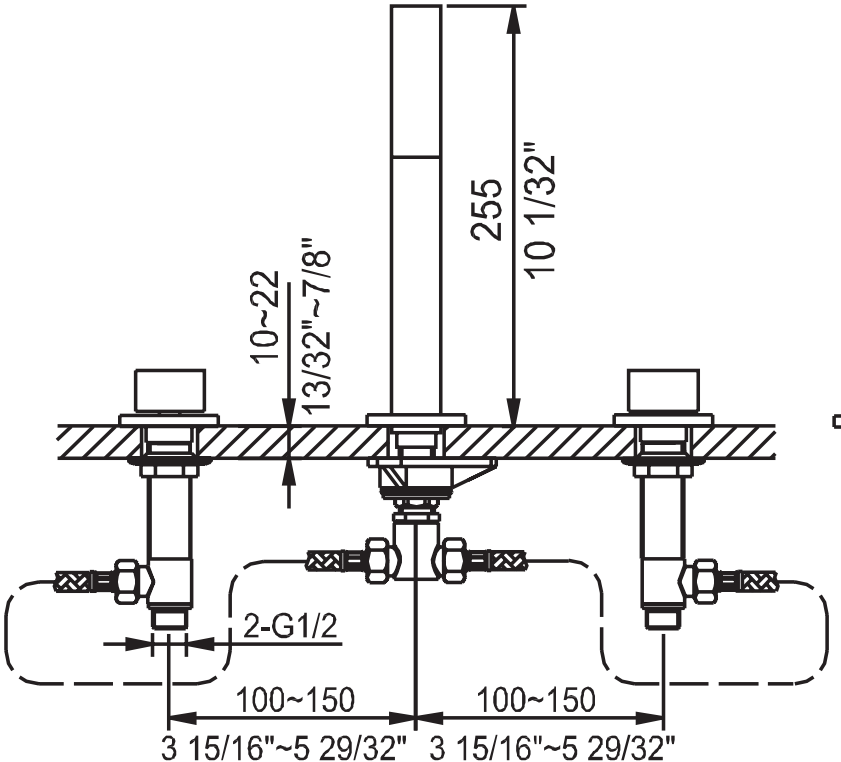
255
10 1/32"
10~22
13/32"~7/8"
2-G1/2
100~150
3 15/16"~5 29/32"
100~150
3 15/16"~5 29/32"

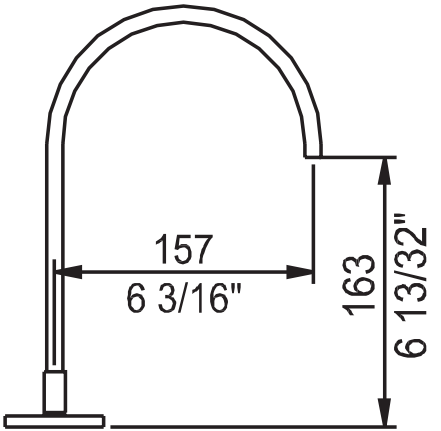
157
6 3/16"
163
6 13/32"