KINGSTON

TO ORDER PARTS, CALL: 1-877-252-7277
www.kingstonbrass.com

VRTSQ683222

68" Solid Surface White Stone Freestanding Tub with Drain

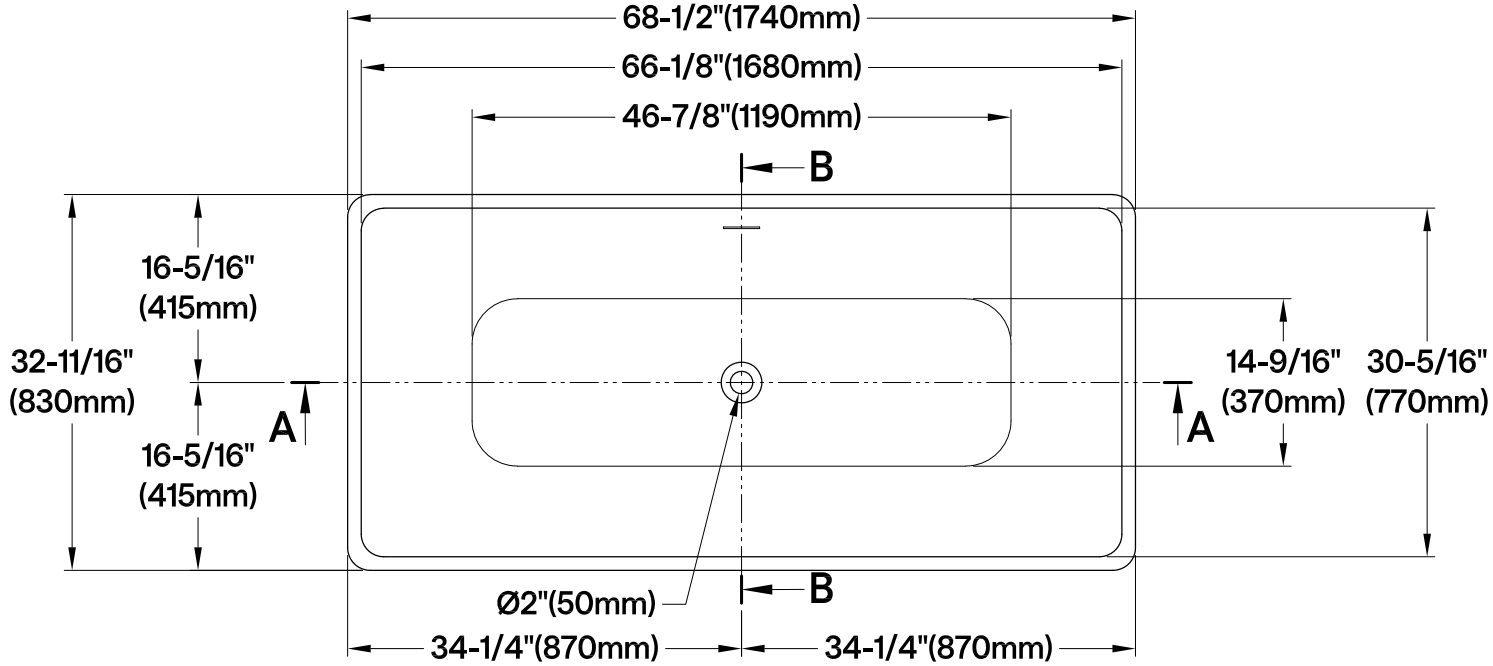

Drain Hole Size
Scale (2:1)

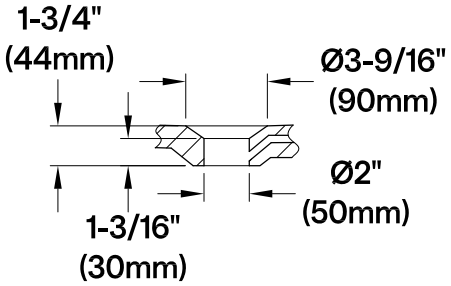

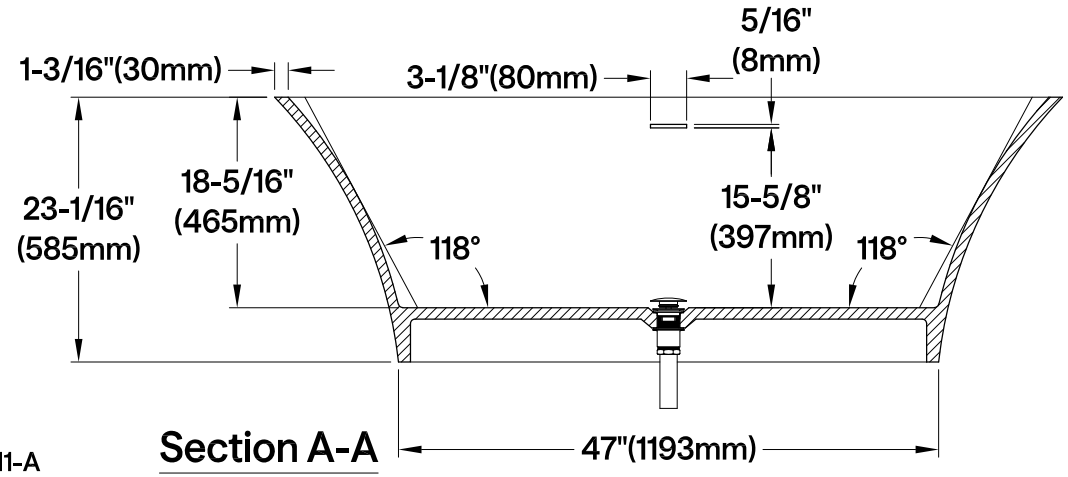

Section A-A

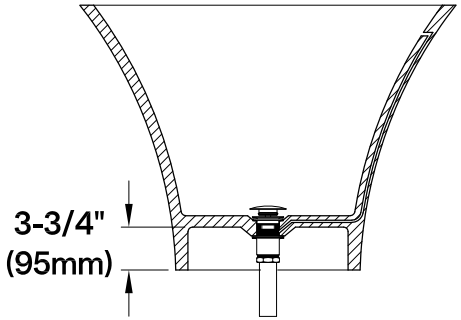

Section B-B

2025-11-A