Operating Instructions & Parts Manual

EN

PALMGREN®

a CH Hanson brand

1” x 42” Belt / 8” Disc Sander

Model 9681062

9642804.01

PALMGREN®

a CH Hanson brand

PLEASE READ AND SAVE THESE INSTRUCTIONS. READ CAREFULLY BEFORE ATTEMPTING TO ASSEMBLE, INSTALL, OPERATE OR MAINTAIN THE PRODUCT DESCRIBED.

PROTECT YOURSELF AND OTHERS BY OBSERVING ALL SAFETY INFORMATION. FAILURE TO COMPLY WITH INSTRUCTIONS COULD RESULT IN PERSONAL INJURY AND/OR PROPERTY DAMAGE! RETAIN INSTRUCTIONS FOR FUTURE REFERENCE.

PLEASE REFER TO BACK COVER FOR INFORMATION REGARDING PALMGREN'S WARRANTY AND OTHER IMPORTANT INFORMATION.

Model #: _____

Serial #: _____

Purch. Date: _____

GETTING STARTED

Save this manual

You will need this manual for the safety warnings and precautions, assembly instructions, operating and maintenance procedures, parts list and diagram. Keep your invoice with this manual. Write the invoice number on the inside of the front cover. Keep this manual and invoice in a safe and dry place for future reference.

Structural requirements

Make sure all supporting structures and load attaching devices are strong enough to hold your intended loads. If in doubt, consult a qualified structural engineer.

Electrical requirements

The power supply to the Model 9681062 Belt / Disc Sander is 115V, 60Hz, 5.8 amps. The standard allowable voltage variation is a plus or minus 10%.

UNPACKING

When unpacking, check to make sure all parts listed below are included. If any parts are missing or broken, please contact your local retailer.

⚠ CAUTION ***Never use highly volatile solvents. Avoid getting cleaning solution on paint as it may tend to deteriorate these finishes. Use soap and water on painted components.***

IMPORTANT: Many unpainted steel surfaces will have been coated with a protectant. To ensure proper fit and operation, remove the coating. Coating can be easily removed with mild solvents, such as mineral spirits and a soft cloth. Avoid getting solution on paint or any of the rubber/plastic parts. Solvents may deteriorate these finishes. Use soap and water on paint, plastic or rubber components. After cleaning, cover all exposed surfaces with a light coating of oil.

Contents:

- Motor and Base Assembly
- Belt Housing Assembly
- Belt Sanding Table
- Motor Belt Cover
- Disc Sanding Table
- 8” Sanding Disc
- 8” PSA Sander Paper Disc
- V-Belt Rear Cover
- 2” Dust Port
- Disc Dust Cover
- Miter Gauge
- Table Lock Handles
- Hardware Pack with Wrench and Miter Gauge Holder
- 2.5 mm Hex Wrench
- 8 mm Hex Wrench

Unpack

Remove all the over packing materials, but leave unit attached to its pallet. Do not discard packing materials until after the machine has been inspected for damage and completeness. Locate loose parts and set them aside.

Inspect

- After unpacking the unit, carefully inspect for any damage that may have occurred during transit. Check for loose, missing or damaged parts. Shipping damage claims must be filed with the carrier.
- All tools should be visually inspected before use, in addition to regular periodic maintenance inspections.
- Be sure that the voltage labeled on the unit matches your power supply.

SAFETY RULES

⚠ WARNING ***For your own safety, read all of the instructions and precautions before operating tool.***

⚠ WARNING ***Always follow proper operating procedures as defined in this manual even if you are familiar with the use of this tool or similar machines. Remember that being careless for even a fraction of a second can result in severe personal injury.***

PROPOSITION 65 WARNING: Some dust created by using power tools contain chemicals known to the state of California to cause cancer, birth defects or other reproductive harm.

Some examples of these chemicals are:

- Lead from lead-based paints
- Crystalline silica from bricks and cement and other masonry products
- Arsenic and chromium from chemically-treated lumber

Your risk from these exposures varies, depending on how often you do this type of work. To reduce your exposure to these chemicals: work in a well ventilated area and work with approved safety equipment. Always wear a **OSHA/NIOSH** approved, properly fitting face mask or respirator when using such tools.

Preparing for your job

- Wear safety glasses complying with United States ANSI Z87.1. Everyday glasses only have impact resistant lenses. They are not safety glasses.
- Wear an ANSI approved dust mask.
- Wear proper apparel when using this tool. Do not wear loose clothing, gloves, neckties, rings, bracelets or other jewelry which may get caught up in moving parts of this machine.
- When using this machine, wear protective hair covering to contain long hair.
- Wear safety shoes with non-slip soles.
- Be alert and think clearly. Never operate power tools when tired, intoxicated or when taking medications that cause drowsiness.

Preparing the work area for your job

- Keep your work area clean. Cluttered work areas invite accidents.

PALMGREN® a CH Hanson brand

- Do not set up or use the Belt / Disc Sander in dangerous environments. Do not set up or use the Belt / Disc Sander in damp or wet locations. Do not expose this machine to rain.
- Make sure your work area is properly lighted.
- Proper electrical connections should be set up for this machine.
- Extension cords should have a grounding prong and the three wires of the extension cord should be of the proper gauge.
- Keep visitors at a safe distance from work area.
- Keep children out of the workplace. Make your workshop childproof. Use padlocks, master switches or remove switch keys to prevent any unintentional use of your power tools.

Maintaining your tool

- Always unplug the tool and remove it from its power source prior to inspection or adjustment. If your machine plugs into an electrical outlet do not unplug the tool by pulling on the cord.
- Consult this manual for specific maintenance and adjustment procedures.
- Keep the tool clean for safest operation. Wood dust build ups can become combustible.
- Check for damaged parts. A part that is damaged should be properly repaired or replaced. Do not perform makeshift repairs. Use the parts list in this manual to order repair parts. Repairs must be made by a qualified technician.

Know how to use your tool

⚠ WARNING ***Dusty work environments may be hazardous to your health. Always wear a OSHA/NIOSH approved, properly fitting face mask or respirator.***

⚠ WARNING ***The operation of any machine can result in foreign objects being thrown into the eyes, which can result in severe eye damage. Always wear safety goggles complying with United States ANSI Z87.1. (shown on package) before commencing power tool operation.***

⚠ CAUTION ***Think safety! Safety is a combination of operator common sense and alertness at all times when tool is being used.***

- Do not attempt to operate this tool until it is completely assembled according to the directions in this manual.
- Do not turn ON this machine if parts are missing or damaged.
- It is highly recommended this machine be mounted on a level surface or stand.
- Replace worn, frayed or torn abrasives, as injury to the user or machine may result.
- Always keep your hands and face away from moving parts, belts, discs and pulleys.
- Know your tool. Learn the tool's operation, application and specific limitations.
- Never operate the machine without the disc guards in place.
- Completely disconnect this machine from its power source when changing an abrasive disc or belt.
- Use the right tool for the job. Do not force a tool or attachment to do a job for which it was not designed.
- To reduce the risk of electrical shock, never use the machine in rain or allow it to become wet.
- Never attach the Belt / Disc Sander to a dust extraction unit used for wood sanding if you are sanding metal. The sparks can cause a fire or explosion.
- Turn the tool off immediately in the case of an emergency. Completely remove the tool from its power source before attempting to fix the issue.
- Never leave tool running unattended. Turn the power off and do not leave tool until it comes to a complete stop.
- Do not use the tool as a toy or let children play with it. Care should be taken when using the tool around children or animals.
- Avoid accidental start-ups. Make sure that the power switch is in the OFF position before plugging the machine in or connecting it into an appropriate electrical resource.
- Do not overreach. Keep proper footing and balance.
- Never stand on the machine. Serious injury could occur if the tool tips or if the sanding disc is unintentionally contacted.
- Only use recommended accessories. The improper use of accessories may create a risk of operator injury.
- Handle workpieces correctly to help protect your hands from possible injury.
- Support your workpiece with the supplied miter gauge or the work table. "Free-hand" sanding is not recommended.
- Maintain a 1/16" maximum clearance or less between table and sanding disc or belt.
- Follow OSHA lock-out, tag-out procedures to prevent accidental machine starts.

Electrical connections

⚠ WARNING ***Make sure the tool is off before plugging it into a power source to prevent accidental starts.***

⚠ WARNING ***Do not permit fingers to touch the terminals of plug when installing or removing from outlet.***

Electrical safety

- Double insulated tools are equipped with a polarizing three pronged plug (one blade is wider than the other.) This plug will fit in a polarized outlet only one way. If the plug does not fit fully into the outlet, reverse the plug. If it still does not fit, contact a qualified electrician to install a polarized outlet. Do not change the plug in any way.
- Double insulation eliminates the need for the three wire grounded power cord and grounded power supply system. Before plugging in the tool, be certain the outlet voltage supplied is within the voltage marked on the nameplate.
- Avoid body contact with grounded surfaces such as pipes,

radiators, ranges and refrigerators. There is an increased risk of electric shock if your body is grounded. If operating the power tool in damp locations is unavoidable, a Ground Fault Circuit Interrupter must be used to supply the power to your tool. Rubber soled footwear will further enhance your personal safety.

4. Don't expose this or any tools to rain or wet conditions. Water entering a power tool will increase the risk of electric shock.
5. Do not abuse the cord. Never pull on a cord to unplug it from an outlet. Keep the cord away from heat, oil, sharp edges or moving parts. Replace damaged cords immediately. Damaged cords increase the risk of electric shock.

Extension cords

- The use of an extension cord will cause some drop in voltage and loss of power.
- Wires of the extension cord must be of sufficient size to carry the current and maintain adequate voltage.
- Use the table to determine the minimum wire size (A.W.G) extension cord.
- Use only 3-wire extension cords having 3-prong grounding type plugs and 3-pole receptacles which accept the tool plug.
- If the extension cord is worn, cut or damaged in any way, replace it immediately.

Extension cord length

Wire Size	A.W.G.
Up to 25 ft	16
25 to 100 ft	14

NOTE: Using extension cords over 100 ft long is not recommended.

SPECIFICATIONS

Model 9681062 - 8" Disc / 1" 42" Belt Sander

Motor	1/3 HP, 120V, 60Hz, 5.8 amps
Belt Speed (RPM)	3,000
Belt Size	1" x 42"
Disc Speed (RPM)	1,770
PSA Disc Size (dia.)	8"
Dust Ports (2 - dia.)	1-3/4" and 2"
Overall Dimensions (L x W x H)	21″ x 13.6″ x 15.6″
Net Weight	63 lbs

PACKAGE CONTENTS

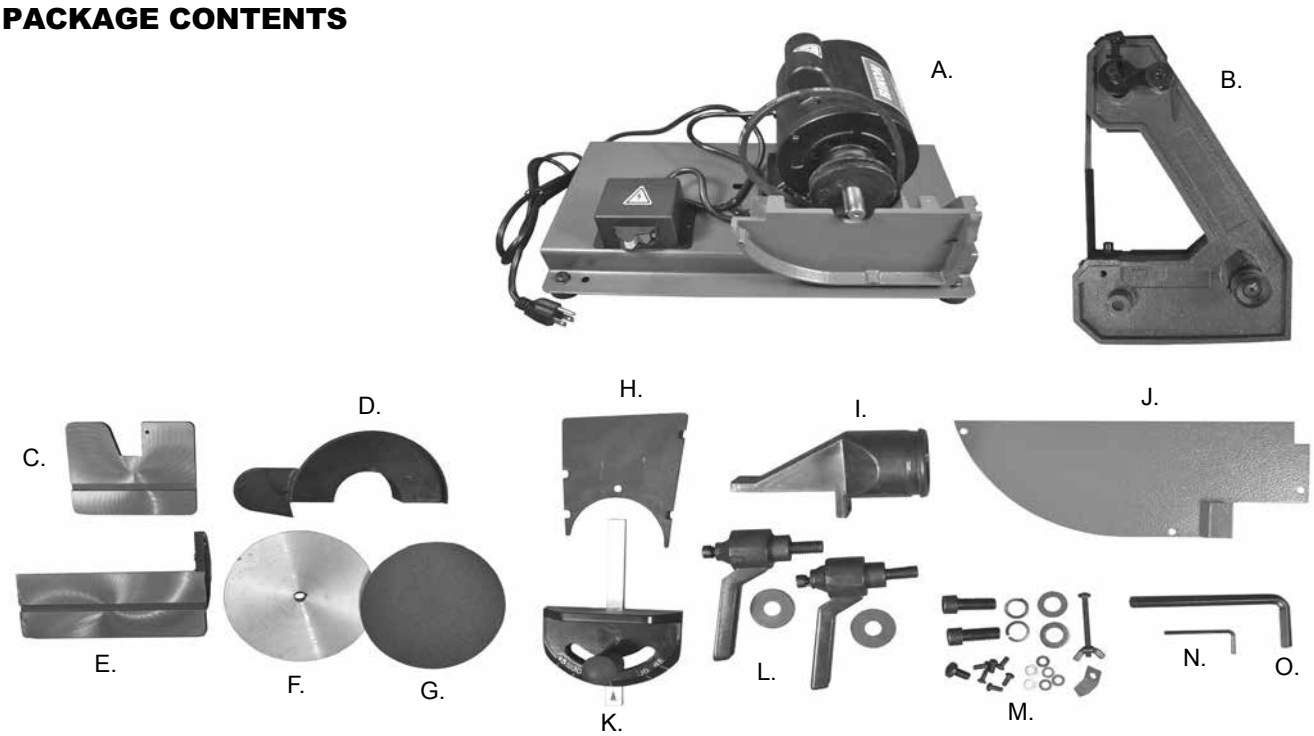

A. Motor and Base Assembly
B. Belt Housing Assembly and Frame
C. Belt Sanding Table
D. Motor Belt Cover
E. Disc Sanding Table
F. Sanding Disc, 8"
G. Sandpaper Disc, 8" PSA
H. V-Belt Rear Cover.
I. Dust Port, 2"
J. Disc Dust Cover.
K. Miter Gauge
L. Table Lock Handles
M. Hardware Pack with Wrench and Miter Gauge Holders
N. Hex Wrench 2.5 mm
O. Hex Wrench 8 mm

PALMGREN® a CH Hanson brand

MODEL 9681062 BELT / DISC SANDER FUNCTIONAL PARTS

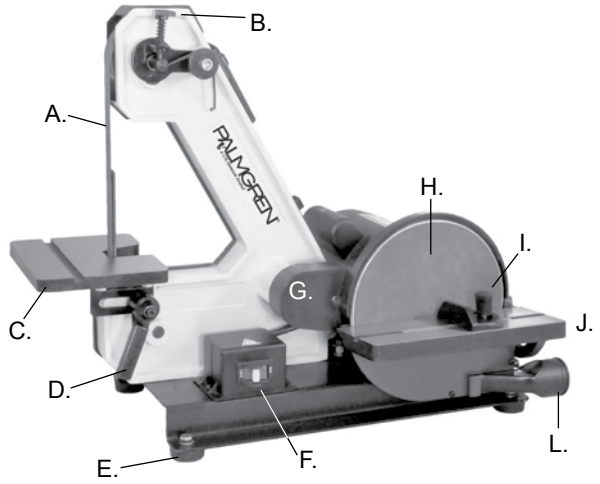

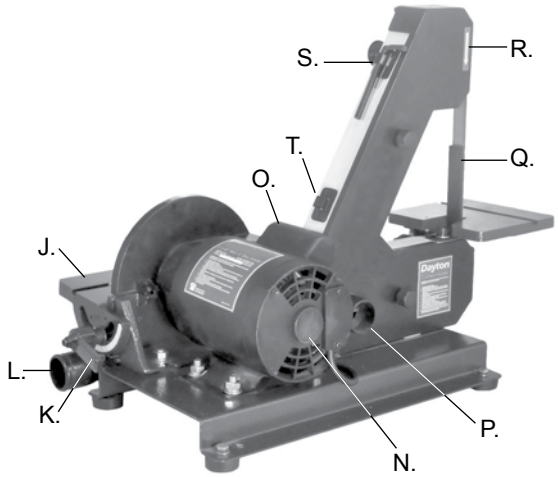

A. Sanding Belt 1”x42”
B. Sanding Belt Tracking Knob
C. Sanding Belt Table
D. Sanding Belt Table Lock Handle
E. Rubber Machine Feet
F ON/OFF Safety Switch
G. Motor V-Belt Safety Cover
H. Sanding Disc 8” PSA
I. Miter Gauge
J. Sanding Disc Table
K. Sanding Disc Table Lock Handle
L. Sanding Disc Dust Port
M. Sanding Disc Table Angle Scale
N. Motor
O. Motor Capacitor
P. Sanding Belt Dust Port
Q. Sanding Belt Platen
R. Sanding Belt Safety Cover
S. Holder for Hex Wrenches
T. Holder for Miter Gauge

ASSEMBLY/INSTALLATION

⚠ WARNING ***This tool must be connected to or plugged into a properly grounded outlet. Never operate the machine if it is not properly grounded to help prevent electrical shock.***

Power source

- The motor on this machine is designed for operation on the voltage and frequency specified. Normal loads will be handled safely on voltages not more than 10% above or below specified voltage.
- Running the unit on voltages which are not within the range may cause overheating and motor burn-out. Heavy loads require that the voltage at the motor terminals be no less than the voltage specified.

Lifting and mounting the machine

1. Remove the machine from any crating or outer packing.

NOTE: The Belt / Disc Sander is moderately heavy. We highly recommend having two people lift the assembled machine.

2. Remove all components, accessory items and other items from the packaging. Inspect all the items for shipping damage. Do not use any damaged components. Compare all the enclosed items with those listed on pg 5.
3. While this machine can be operated without mounting it to a base or stand it is not recommended. If the unit becomes unstable it could tip, resulting in injury to the operator.

Lifting and setting up the machine

Shown below are the dimensions for the belt / disc sanding machine. You can use the information below to place your machine into its final position. Also, allow extra space around the machine for the handing larger workpieces and dust extraction connections

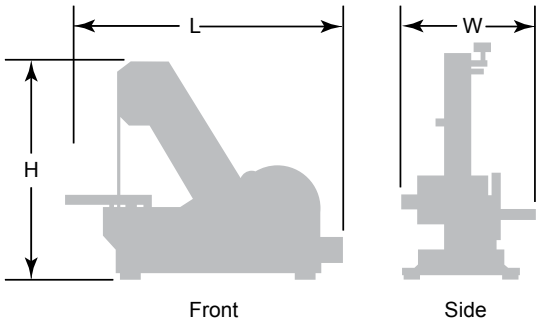

Length	Width	Height
21”	13.6”	15.6”

ASSEMBLING THE COMPONENTS

⚠ WARNING ***The sander must no be plugged in and the power switch must be completely off until the assembly process has been correctly completed.***

Required tools

The only tool needed for assembly that is not supplied is a #2 philips screwdriver.

You will see numerical references to parts in the assembly steps. These numbers refer to the exploded view of the tool shown on page 17.

Assemble the frame to the base

1. Place the Base (Part #5) on a bench and locate the two elongated holes that will be used to secure the sanding Frame (#64) to the base.

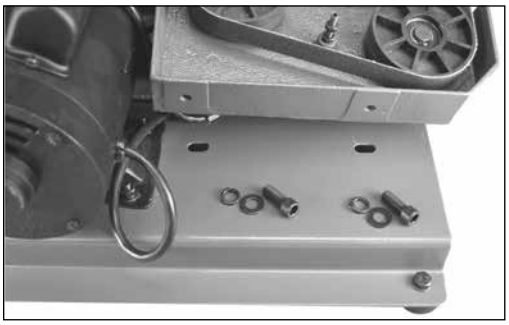

Figure 1

2. Remove the plastic Belt Cover (#74) from the frame, by unscrewing the two Knobs (#75). This will allow you to see the two threaded holes in the frame for alignment with the base's holes as shown above in figure 1 .

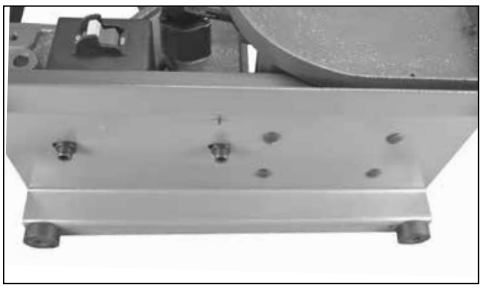

Figure 2

3. Line up the two holes in the frame with the two holes in the base. From the bottom of the base, insert the two hex head Screws, Washers and Lock Washers (#7, 2, 3) through the holes to join them together. You need to tilt the base up to do this. Hand tighten the two screws as shown above in figure 2.
4. Do not completely tighten the screws at this point.

INSTALL THE V-BELT

5. The large Belt Pulley (#42) is on the motor arbor and the smaller Pulley (#87) is on the arbor that extends from the frame to drive the sanding belt. Slip the V-Belt (#38) onto the pulleys as shown in figure 3.
6. Slide the sanding belt frame assembly to tighten the belt, so there is between 1/4" and 1/2" of deflection, as shown in figure 4.

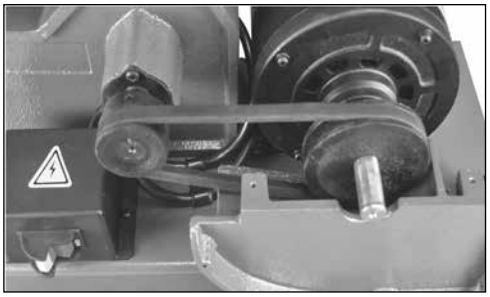

Figure 3

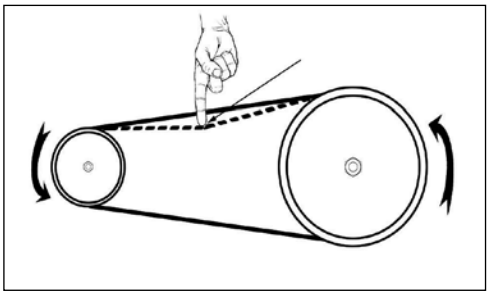

Figure 4

7. Both pulleys should be in-line with each other. If not, move the frame and/or pulleys to align.
8. Completely tighten the screws holding the sanding frame to the base, and re-attach the cover (#74). See previous step 2.

Assemble the belt and pulley guard

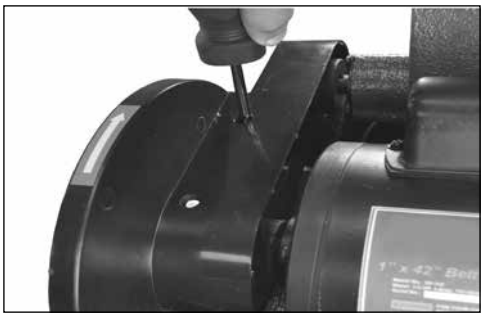

Figure 5

9. Position the belt and disc Drive Belt Guard (#37) over the pulleys as shown above in figure 5 .
10. Line up the two holes in the guard with the holes in the Sanding Disc Casting (#15), and fasten the guard in place with the two M4 pan head Phillips Screws and Washers (#14, 35).
11. Do not completely tighten the screws at this time, as you have to adjust the guard to the disc.

NOTE: Access to the one screw is through a pre-cut hole located near the small pulley end.

PALMGREN® a CH Hanson brand

ASSEMBLING THE COMPONENTS - CONTINUED

Install the inside belt guard

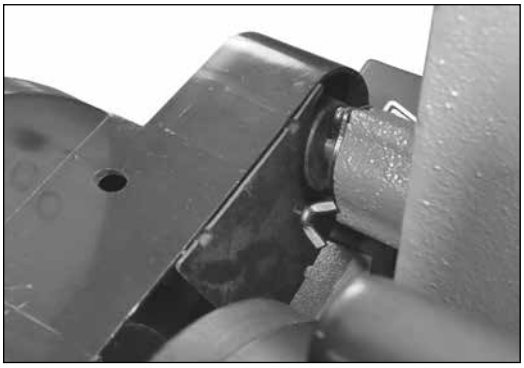

Figure 6

12. The inside metal Safety Plate (#39) fits between the motor and the Belt Cover (#37).
13. Position the metal plate inside of the belt guard. The bent tabs will keep it in place, then secure it with the long M4 Phillips head Screw (#36) and hex Nut (#40) as shown above in figure 6.

Install the sanding disc

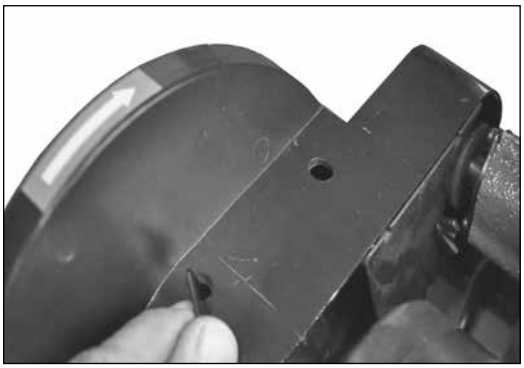

Figure 7

14. Make sure the metal Sanding Disc Plate (#33) is clean of foreign material.

NOTE: This disc only accepts PSA (pressure sensitive adhesive) sanding abrasives.

15. Peel the protective backing from the supplied sandpaper disc (#32), center it on the metal disc, and press it in place.
16. Install the sanding disc onto the motor arbor. Align the disc's keyway to the motor's shaft key and slide the disc in place. Align the disc up with the disc guard so it is slightly raised of the cover. This enables the workpiece to pass by it without rubbing the cover.
17. Tighten the disc onto the motor shaft with the pre-installed hex Set Screw (#34). You can get access to it through the hole in the cover guard as shown above in figure 7.

Install the dust port

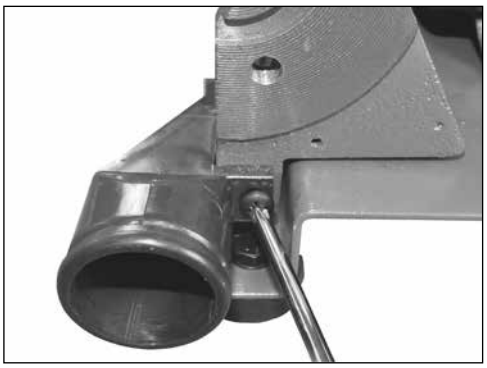

Figure 8

18. Attach the Dust Port (#19) to the sanding disc base using the M6 Phillips head Screw and Washer (#18, 17) as shown in figure 8 above.
19. The Dust Port has a 1-3/4" internal diameter, and 2" outer diameter for use with a 2" flex hose to your dust collector.

Install the lower disc guard

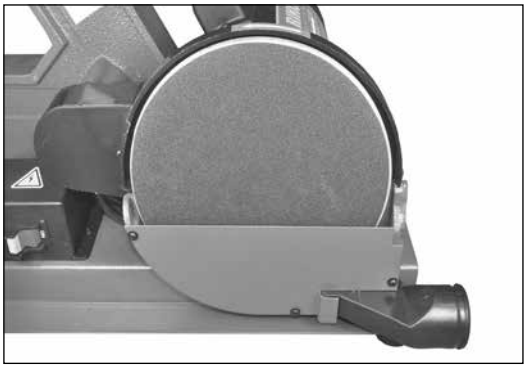

Figure 9

20. Attach the metal, lower Disc Safety Plate (#31) to the sanding disc base with the three M4 Phillips head Screws (#14) as shown above in figure 9.

Install the disc sanding table

21. An adjustable Handle and Washer (#25, 26) are supplied to hold the Sanding Disc Table (#22) in position on the sanding base.

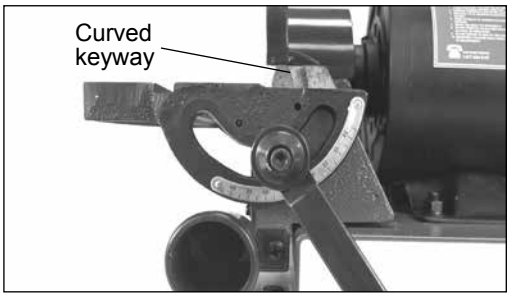

Figure 10

22. Line the disc sanding table's slotted right end with the curved keyway in the sanding disc base. Position it in the keyway so that the handle can be installed, fastening the parts together as shown above in figure 10.

NOTE: It is easier to thread the bolt part of the handle on first, then attach the handle to it using the spring loaded Allen head cap screw provided.

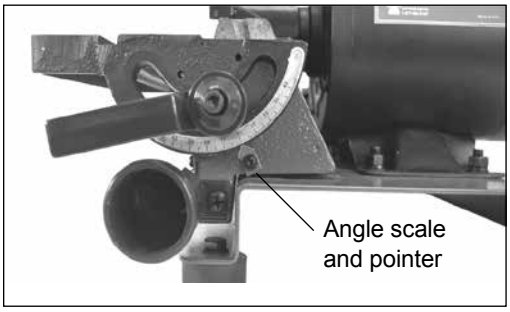

Figure 11

23. Attach the Angle Scale Pointer (#16) to the sanding disc frame with the M4 Phillips pan head Screw (#14). The pre-drilled hole is located just below the angle gauge. As shown above in figure 11.

Figure 12

Adjust the pointer after the table is set to 90°, see page 12. The disc table will tilt from 45° to 90°. As shown above in figure 12.

Install the belt sanding table

⚠ WARNING ***Tables should be adjusted to a distance of about 1/16" away from the sanding disc or belt to prevent accidents if work or your fingers get stuck in the gap while the sander is running.***

24. An adjustable Handle and Washer (#25, 26) are supplied to hold the Sanding Belt Table (#79) in position on the Sanding Frame (#64).
25. Position the sanding belt table around the belt, and so that it's lower bracket with the curved slot is in position with the threaded hole in the frame.

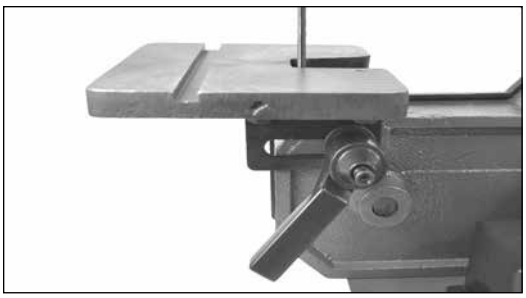

Figure 13

26. Fasten the table in place. Thread the bolt portion of the locking adjustable handle through the bracket's slot and into the threaded hole of the sanding frame as shown in figure 13.

The table will tilt from 45° to 90°.

NOTE: See page 12 for additional information on adjusting the sanding tables.

Install the tool holders

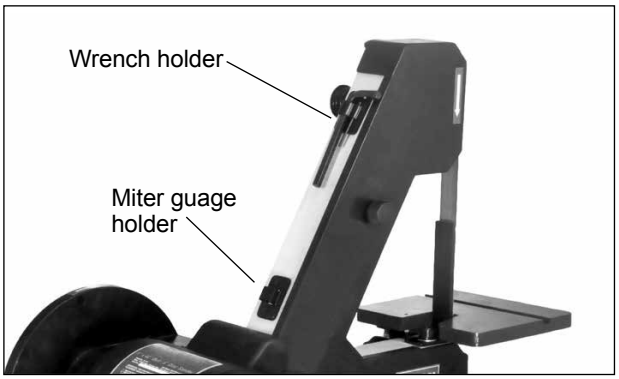

Figure 14

Holders (#88, 90) for convenient storage of the Miter Gauge and Wrenches are supplied. Mount them onto the back of the Belt Frame Casting (#64) with the Phillips Screws supplied (#89).

Mounting the sander to a workbench or stand

⚠ CAUTION ***If during operation there is any tendency for the sander to tip over, slide or walk on the supporting surface, the sander must be properly mounted to a workbench or stand.***

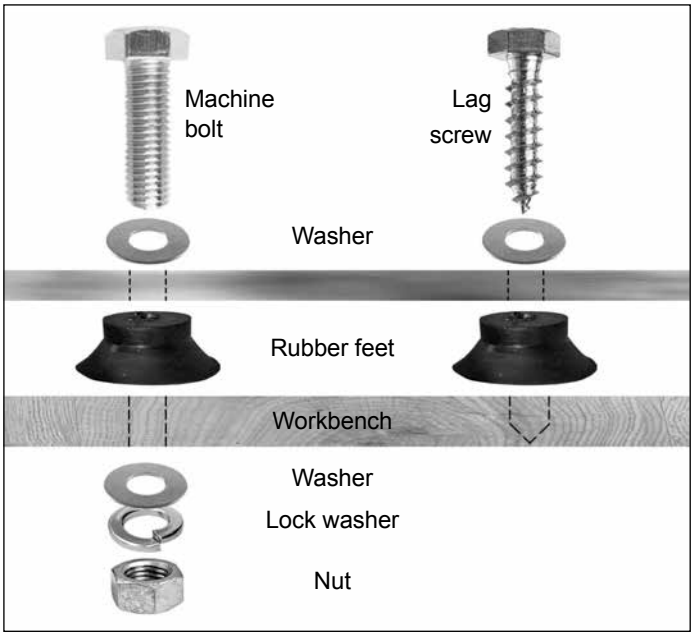

Figure 15

1. Rubber feet are fastened to this sander prior to shipping. They may, or may not, be used when attaching the sander to a bench or stand.
2. Position the sander on the workbench.

3. There are two options for mounting the sander to the workbench:
   - Use the two extra holes in the base (located by the front right foot, and rear left foot when looking at the sanding belt table);
   - Use the four holes that are securing the rubber feet. The bolts will have to be removed and replaced with other fasteners to go through the sander's base and feet. See figure 15 on the previous page for illustrations of each method.
4. Mark the workbench through the selected mounting holes located in the sander's base, per above.
5. Drill holes in the workbench at the marks.
6. Using long bolts, washers, lock-washers and nuts; or lag bolts; (fasteners not supplied), secure the sander to the workbench as shown in figure 15.

Test running the sander

⚠ WARNING ***The sander must no be plugged in and the power switch must be completely off until the assembly process has been correctly completed.***

While still unplugged and with the power switch off, check the fully assembled sander to make sure all parts and fasteners are secure. Plug the sander in and turn it on and confirm it runs smoothly. If any adjustments are needed, these must be done with the machine turned off and unplugged for safety.

OPERATION

⚠ WARNING ***The sander must no be plugged in and the power switch must be completely off until the assembly process has been correctly completed.***

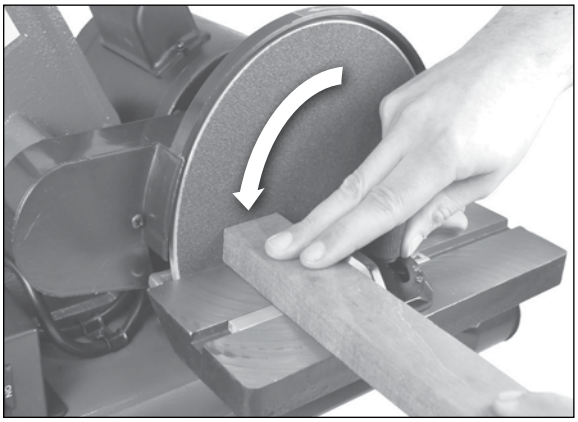

Figure 16

⚠ WARNING ***When sanding, always position your work on the downward, rotating side (left side) of the sanding disc. Shown above in figure 16. The sanding action will then force the wood down, safely towards the table, where it can be controlled. Sanding on the right, upward rotating side of the disc is dangerous, as your work cannot be controlled and 'kick-back' may occur - the wood being forced up and out of your hands.***

⚠ WARNING ***Always ensure the sander is turned off and unplugged prior to attempting any assembly, installation or changing of parts and accessories.***

Disc sanding

⚠ WARNING ***Dusty work environments may be hazardous to your health. Always wear a OSHA/NIOSH approved, properly fitting face mask or respirator.***

⚠ WARNING ***Always wear safety glasses complying with U.S. ANSI Z87.1 before beginning any sanding operation.***

⚠ WARNING ***Make sure all disc guards are in securely in place before starting the disc sanding machine. Never operate the machine without the guards.***

⚠ WARNING ***Always ensure the sander is turned off and unplugged prior to attempting any assembly, installation or changing of parts and accessories.***

NOTE: It is strongly recommended that users employ a dust-collection system when using this machine. Use of a dust mask or respirator is still required, even when using a dust collection system.

1. Depending on what type of sanding that you will be doing, set the Sanding Disc Table to the proper angle from 45° to 90°.
2. Once the table has been set for the correct sanding angle, and all fasteners and lock handles are secure, the machine can be turned on.

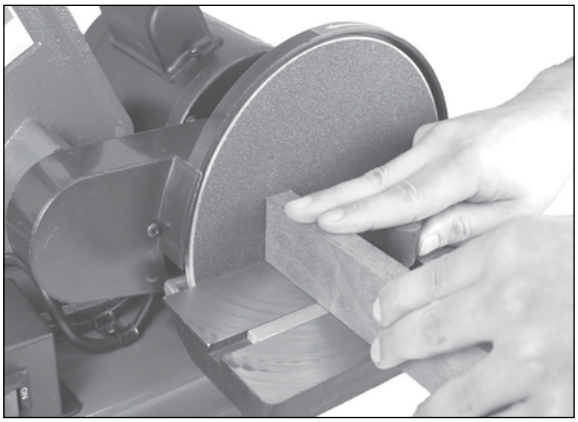

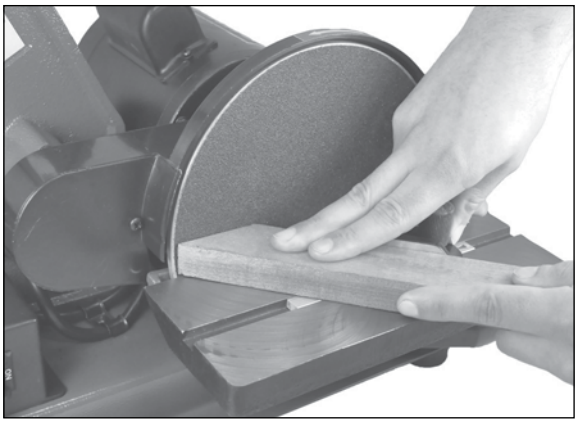

3. Use the Miter Gauge for added control of the workpiece during sanding. The miter gauge can also be set to various degree angles for maintaining accurate angles when sanding small or multiple parts.

4. Do not force the workpiece into the sanding disc. Sand using light pressure, letting the sanding abrasives time to do their work!
5. Move your work piece slightly left and right on the disc, keeping to the left-of-center, downward side. This will help prevent resin or debris from building up on one area of the disc, and also helps to prevent burning of the sanded surface from excessive abrasive-action heat build-up.

Belt sanding

⚠ WARNING ***Dusty work environments may be hazardous to your health. Always wear a OSHA/NIOSH approved, properly fitting face mask or respirator.***

⚠ WARNING ***Always wear safety glasses complying with U.S. ANSI Z87.1 before beginning any sanding operation.***

⚠ WARNING ***Make sure all disc guards are in securely in place before starting the disc sanding machine. Never operate the machine without the guards.***

⚠ WARNING ***Always ensure the sander is turned off and unplugged prior to attempting any assembly, installation or changing of parts and accessories.***

NOTE: It is strongly recommended that users employ a dust-collection system when using this machine. Use of a dust mask or respirator is still required, even when using a dust collection system.

1. Depending on what type of sanding that you will be doing, set the Sanding Belt Table to the proper angle from 45° to 90° with a protractor, or other angle measuring tool or pre-cut sample.
2. Once the table has been set for the correct sanding angle, and all fasteners and handles are secure, the machine can turned on.
3. Use the Miter Gauge for added control of the work piece during sanding. The miter gauge can also be set to various degree angles for maintaining accurate angles when sanding small or multiple parts.

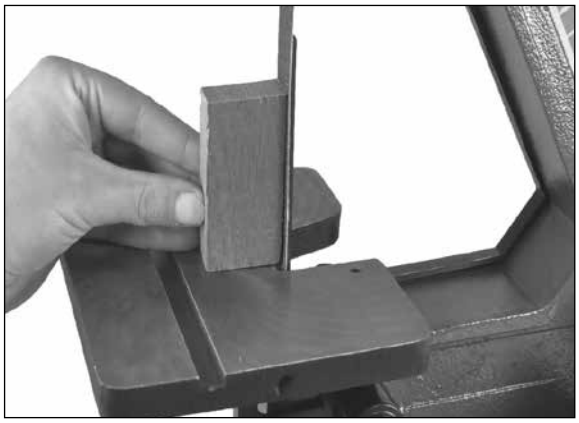

4. Do not force the work piece into the sanding belt. Sand using light pressure, letting the sanding abrasives time to do their work!
5. Move your work piece slightly left and right on the belt. This will help prevent resin or debris from building up on one area of the belt, and also helps to prevent burning of the sanded surface from excessive abrasive-action heat build-up.

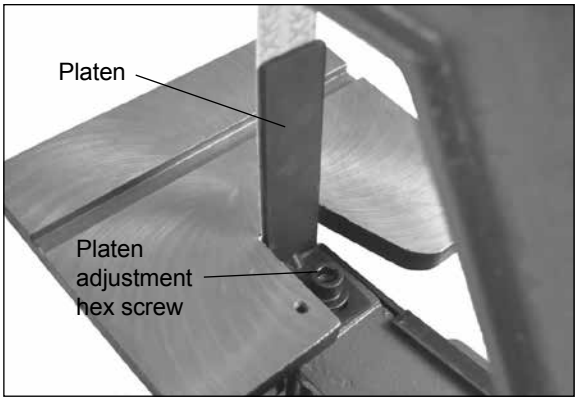

Figure 17

6. The Platen (#67) supports the back of the sanding belt and offers a flat surface to sand or sharpen against. It should be positioned so it is almost touching the back of the sanding belt.
7. To adjust the platen, loosen the hex Screw (#7) at the rear of the platen as shown in figure 17.
8. The platen can also be removed for contour sanding or polishing.

Adjusting the sanding belt tracking

⚠ WARNING ***Always ensure the sander is turned off and unplugged prior to attempting any making any adjustments.***

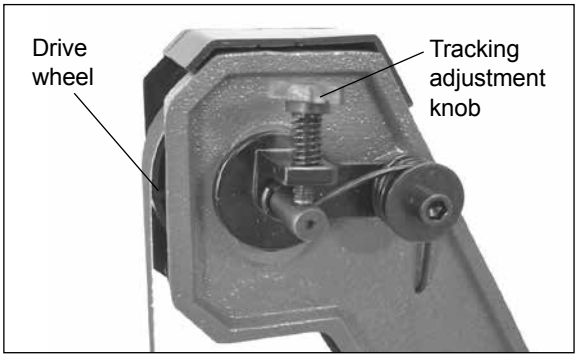

1. Belt tracking on the center of the drive wheels is pre-set at the factory. If an adjustment needs to be made, the sander must be turned on.
2. Slowly turn the Belt Tracking Knob (#61) to correct the tracking of the belt - left or right as needed - so that the belt finally rides on the center of the guide wheel (#72).

Adjusting the sanding belt tracking

1. Remove the plastic Cover (#74) from the frame by unscrewing the two knobs (#75).
2. Tilt the sanding belt table forward to 45° so that there is ample space between the platen and rear of the table to remove the belt.

PALMGREN® a CH Hanson brand

OPERATION – CONTINUED

Adjusting the sanding belt tracking

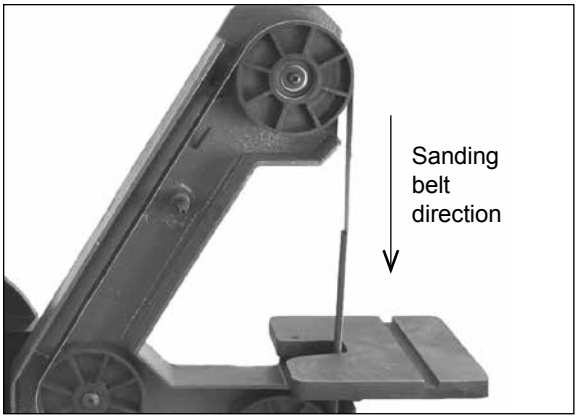

Figure 16

3. Press down on the tracking adjustment knob shown in figure 18 to compress the spring tension, and then be able to slide the sanding belt off the three pulleys.
4. Install a new sanding belt by compressing the tracking knob and sliding the new belt onto the three drive wheels.
5. Re-attach the safety cover onto the frame with the two knobs.
6. Check the belt tracking to ensure that the belt is riding on the center of the drive wheels. See page 14 for the belt tracking procedures.

Changing the sanding disc

⚠ WARNING ***Always ensure the sander is turned off and unplugged prior to changing the sanding disc.***

NOTE: Hook and loop sanding discs cannot be used with this sander. Only 8” sanding discs with pressure sensitive adhesive (PSA) backing can be used.

1. Remove and set aside the miter gauge.
2. Remove the sanding disc table.

Figure 19

3. Peel the used abrasive disc from the metal sanding disc plate as shown in figure 19.
4. Make sure that the disc plate is clean of any dirt or adhesive residue.
5. Peel the protective backing from the new PSA 8” abrasive sanding disc.
6. Center and press the new sanding disc firmly onto the disc plate.
7. Replace the sanding table and handle that were removed in step 2.

Disc table adjustments

⚠ WARNING ***Always ensure the sander is turned off and unplugged prior to making any adjustments to the machine.***

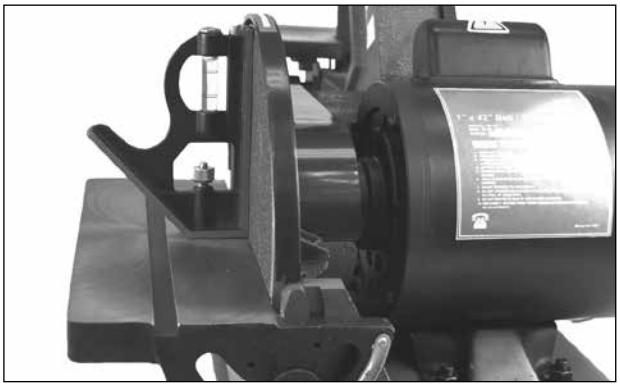

Figure 20

1. To check the trueness of the 90° angle of the disc sanding table, place a square or other measuring device on the table with the other end against the sanding disc as shown in figure 20.
2. Loosen the disc table adjustment Handle (#25), and adjust table angle to 90°.
3. Re-tighten the disc table adjustment handle.
4. Adjust the Angle Scale Pointer (#16) to 0°.

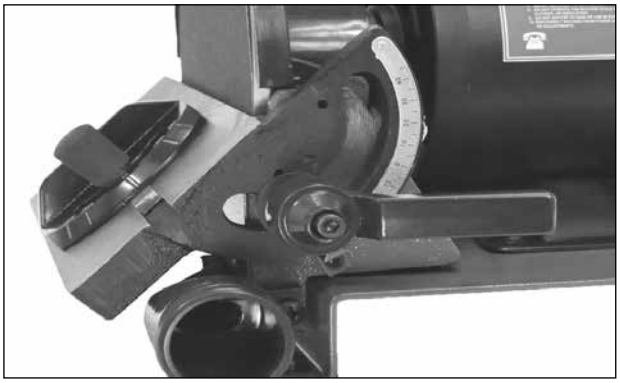

5. To adjust the disc table to another angle, loosen the disc table adjustment handle.
6. Set the table at the desired angle using the angle scale pointer.
7. Re-tighten the disc table adjustment handle.

Belt table adjustments

⚠ WARNING ***Always ensure the sander is turned off and unplugged prior to making any adjustments to the machine.***

For most sanding operations, the table will likely remain at a 90° angle to the belt. A positive stop is provided with your sander to ensure fast positioning of the table at 90 degrees to the belt.

To get the full range of table angling, handle must be very loose, so that it slides along the slot in the table bracket. The table can then be moved back to get maximum angles.

1. Loosen the table-locking Handle (#25).
2. Position the table back to the platen so there is about 1/16" space between it and the belt.

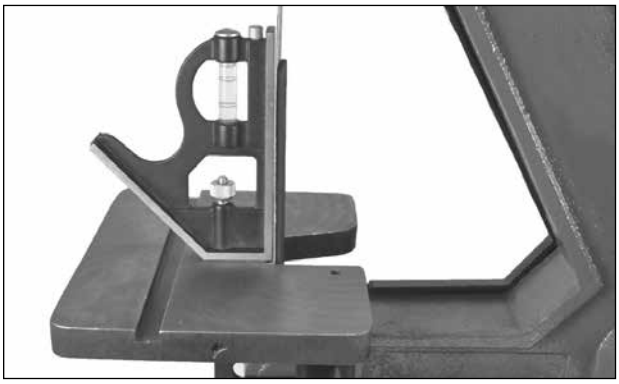

Figure 21

3. Using a square, protractor or other 90° tool, measure the angle of the table against the Platen (#67). Shown in figure 21. Once the 90° is setting is found, lock it in place, then adjust the hex Set Screw Stop (#80), that extends under the table.

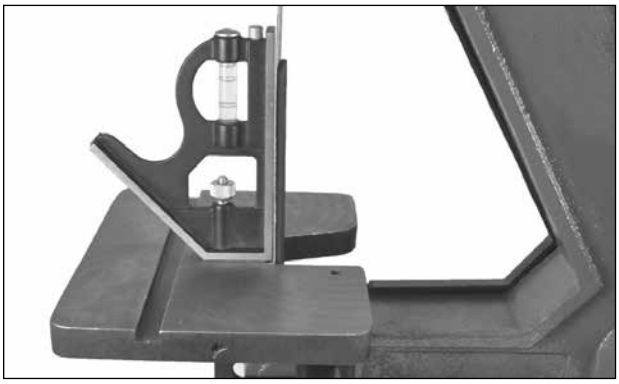

Figure 22

4. To set the table to a different angle, loosen the handle and tilt the table forward until it is at the required angle. Shown in figure 22.
5. Tighten the handle to lock the table in position for sanding.

V-Belt tension adjustments

⚠ WARNING ***Always ensure the sander is turned off and unplugged prior to making any adjustments to the machine.***

If the sanding belt or disc slows down or stalls, the V-belt may be slipping on the two pulleys. This may be because the motor or frame has loosened from the base, or the V-belt has stretched over time due to the machine use. In either case, re-adjustment of the V-belt is needed.

1. To gain access to the V-belt, remove the V- belt rear metal Safety Plate (#39) and V-Belt & Disc Guard (#37).

   For clarity, figure 22 shows the V-belt and pulleys with the metal sanding disc plate, table assembly and lower disc guard removed.

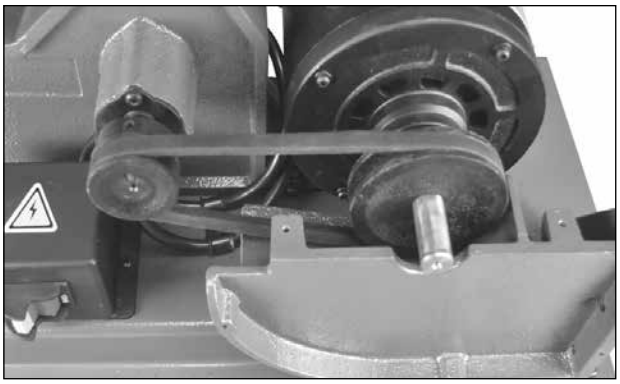

Figure 22

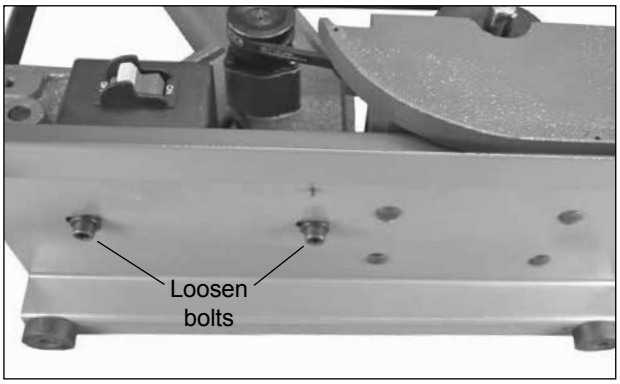

Figure 23

2. Tilt the sander back, and slightly loosen the two hex head Screws (#7) so that the sanding Frame (#64) can be moved a bit forward or backwards to tension the V-belt as shown in figure 23.

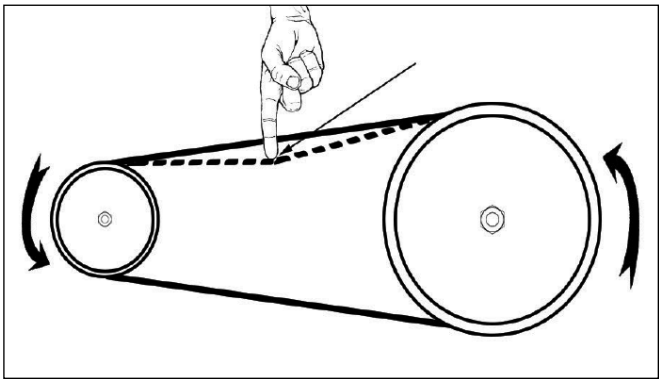

Figure 24

3. Position the frame so the tension on the V-belt is about 1/4" to 1/2" deflection when moderate pressure is applied to the belt. FIG. 30.
4. Tighten the hex head screws to secure the frame in its new position on the base.
5. Re-install the safety guards over the V-belt, in step 1 above. If needed, see page 7 for the installation process.

PALMGREN® a CH Hanson brand

OPERATION – CONTINUED

Miter gauge adjustments

⚠ WARNING ***Always ensure the sander is turned off and unplugged prior to making any adjustments to the miter gauge.***

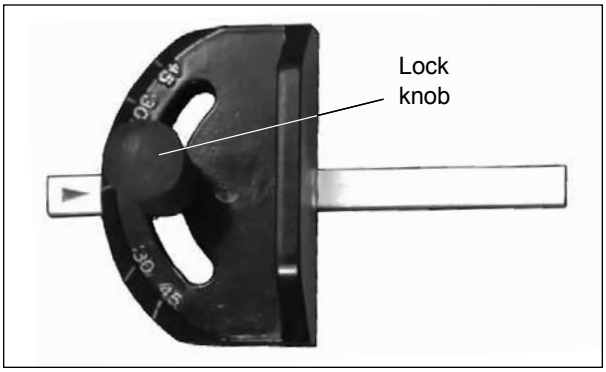

Figure 25

A Miter Gauge is supplied with your sander, and can be used on the disc or belt tables, which have slots in their design to fit the miter gauge's bar. The miter gauge head can be set anywhere up to 45° (right or left) by loosening the Lock Knob (#30), setting the miter gauge head to the desired angle, and then retightening the lock knob as shown in figure 25.

TROUBLESHOOTING GUIDE

Symptom	Possible Cause(s)	Corrective Action
Motor will not start.	1. Low voltage. 2. Open circuit in motor or loose connections. 3. Blown fuse or breaker.	1. Check power source for proper voltage. 2. Inspect all lead connections on motor for loose or open connections. 3. Short circuit. 4. Improper match between tool and circuit, fuse or breaker.
Motor will not start – fuses or circuit breakers tripping or blowing.	1. Short circuit in line, cord or plug. 2. Short circuit in motor or loose connections. 3. Incorrect fuses or circuit breakers in power line.	1. Inspect cord or plug for damaged insulation and shorted wires. 2. Inspect all connections on motor for loose or shorted terminals and/or worn insulation. 3. Install correct fuses or circuit breakers or switch tool to an appropriately sized circuit.
Motor overheats.	1. Motor is overloaded. 2. Extension cord is too long and of insufficient gauge (weight). 3. Poor air circulation around the motor	1. Reduce load on motor (pressure on the sandpaper from the object being sanded.) 2. Utilize an extension cord of appropriate gauge and length or plug tool directly into outlet. 3. Reduce the motor run time.

TROUBLESHOOTING GUIDE

Symptom	Possible Cause(s)	Corrective Action
Motor stalls or runs slow - resulting in blown fuses or tripped circuit.	1. Motor is overloaded. 2. Short circuit in the motor or loose connections. 3. Low line voltage. 4. Incorrect fuses or circuit breakers in the power line. 5. Motor capacitor has failed. 6. Belt tension is too tight.	1. Reduce the load on the motor. 2. Inspect connections on motor for loose or shorted terminals or worn insulation. 3. Correct low voltage conditions (for example: improper extension cord length and/or wire gauge). 4. Install CORRECT fuses or circuit breakers or plug tool into an appropriate circuit, matched to an appropriate fuse or breaker. 5. Replace motor capacitor. 6. Decrease belt tension.
Machine slows down when operating.	1. Feed rate is too great. 2. Undersized circuit or use of undersized extension cord.	1. Reduce the rate at which the work is fed into the sandpaper. 2. Ensure circuit wires or extension cords are proper gauge, or eliminate use of extension cords.
Machine vibrates excessively or makes excess noise.	1. Incorrect motor mounting. 2. Incorrect sanding-belt tension. 3. Weak or broken belt tension spring. 4. Idler roller is too loose. 5. Broken/defective sanding belt or disc. 6. Drive belt is too tight.	1. Make sure all fasteners are tightened. 2. Adjust tension-adjustment knob. Follow belt tensioning/tracking instructions in this manual. 3. Replace belt tension spring. 4. Adjust idler roller. 5. Replace sanding belt/disc. 6. Decrease belt tension.
Burn marks on work piece.	1. Using a sanding grit that is too fine. 2. Using too much pressure. 3. Work held still for too long against the sandpaper.	1. Use a coarser-grit sandpaper. 2. Reduce work piece pressure on the sandpaper while sanding. 3. Do not keep the work piece sanding in one place for too long.
Deep sanding grooves or scars in work piece.	1. Sanding belt/disc grit is too coarse for the desired finish. 2. Workpiece is being sanded across the grain. 3. Too much sanding force on the workpiece. 4. Workpiece held still against the belt-disc for too long.	1. Use a finer-grit sanding belt or disc. 2. Sand with the grain of the wood. 3. Reduce pressure on work piece while sanding. 4. Keep work piece moving while sanding.
Sanding surface clogs quickly.	1. Too much pressure against the belt or disc. 2. Sanding softwood or highly resinous woods.	1. Reduce pressure on work piece while sanding. 2. Use different stock, sandpaper grits, or accept that this will happen and plan on cleaning or replacing belts and discs frequently.
Sanding grains easily rub off the belt or disc.	1. Sandpaper has been stored in an incorrect environment. 2. Sandpaper has been damaged or folded.	1. Ensure sandpaper is stored away from extremely hot and dry or damp/humid conditions. 2. Store sanding accessories flat - not bent or folded.
Work piece lifts up from the sanding disc-table.	1. Sanding on the “up”, right side of the disc, where rotation is up and away from the table.	1. Sand on left side of sanding disc, where the disc rotates down towards the table.

PALMGREN® a CH Hanson brand

REPAIR PARTS ILLUSTRATION FOR MODEL 9681062 - BELT / DISC SANDER

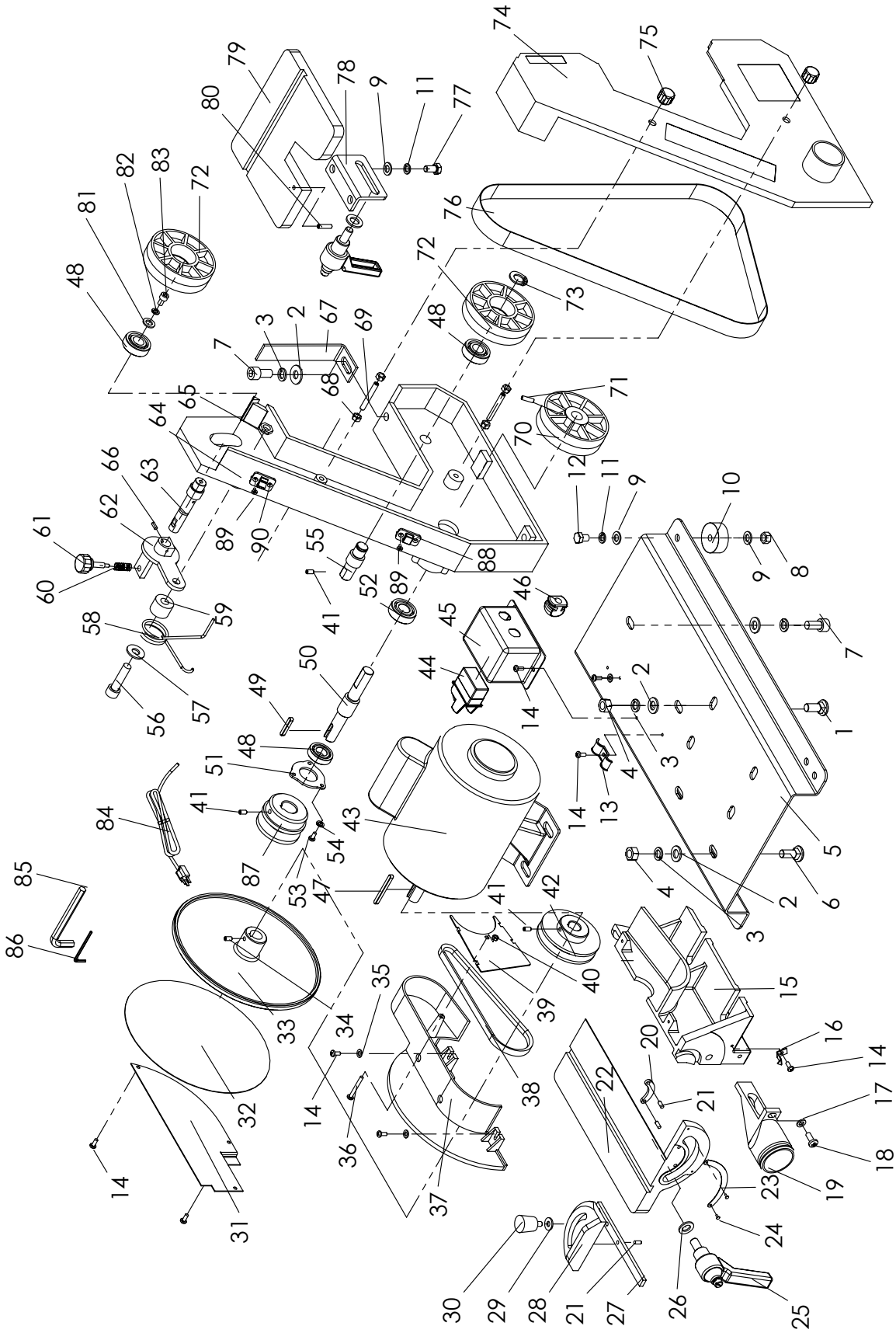

Please provide following information:
-Model number
-Serial number (if any)
-Part description and number as shown in parts list

For Repair Parts, call 1-800-827-3398

REPAIR PARTS LIST FOR MODEL 9681062 - BELT / DISC SANDER

Ref. No.	Description	Part No.	Qty.
1	Carriage Bolt M10X20	*	4
2	Flat Washer M10	*	7
3	Standard Spring Washer M10	*	6
4	Hex Nut M10	*	6
5	Base	9642750.01	1
6	Carriage Bolt M10X25	*	2
7	Hexagon Socket Cap Screws M10X20	*	3
8	Hex Nut M8	*	4
9	Flat Washer M8	*	10
10	Foot	9642751.01	4
11	Standard Spring Washer M8	*	6
12	Hexagon Bolt M8X20	*	4
13	Cord Clip	9642752.01	1
14	Philips Screw M4X10	*	8
15	Sanding Disc Bracket	9642753.01	1
16	Angle Scale Pointer	9642754.01	1
17	Flat Washer M6	*	1
18	Philips Screw M6X15	*	1
19	Dust Collector Port	9642755.01	1
20	Guide Block	9642756.01	1
21	Pin	9642757.01	3
22	Disc Table	9642758.01	1
23	Angle Scale Plate	9642759.01	1
24	Rivet for Name Plate M2X5	*	2
25	Locking Handle	9642760.01	2
26	Flat Washer M10	*	2
27	Miter Gauge Bar	9642761.01	1
28	Dial	9642762.01	1
29	Plastic Washer M6	*	1
30	Knob	9642763.01	1
31	Lower Disc Guard Plate	9642764.01	1
32	Sanding Disc (Med)	9601367.00	1
33	Aluminum Disc	9642765.01	1
34	Hexagon Set Screw M5X5	*	1
35	Flat Washer M4	*	1
36	Philips Screw M4X45	*	1
37	Belt Cover	9642766.01	1
38	V-belt	9642767.01	1
39	Inner Belt Plate	9642768.01	1
40	Hex Nut with Flange	9642769.01	1
41	Hexagon Set Screw M4X45	*	2
42	Motor Pulley	9642770.01	1
43	Motor w/Key	9642771.01	1
44	Switch w/Key	9600423.00	1
45	Switch Cover	9642773.01	1
46	Grommet	9642774.01	1
47	Flat Key M5x50	*	1
48	Deep Groove Ball Bearing 6202 2RS	9642775.01	3
49	Flat Key M5X25	*	1
50	Drive Shaft	9642776.01	1
51	Flange Plate	9642777.01	1
52	Deep Ball Bearing 6002 2RS	9642778.01	1
53	Philips Screw M4X12	*	3
54	Standard Spring Washer M4	*	3
55	Short Guide Wheel Shaft	9642779.01	1
56	Hexagon Socket Cap Screw M10X40	*	1
57	Flat Washer M10	*	1
58	Rotation Spring	9642780.01	1
59	Bushing	9642781.01	1
60	Compressed Spring	9642782.01	1
61	Adjusting Knob	9642783.01	1
62	Guide Roller Support	9642784.01	1
63	Long Guide Wheel Shaft	9642785.01	1
64	Frame	9642786.01	1
65	Special Nut M10	9642787.01	1
66	Roll Pin M3X20	9642788.01	1
67	Platen	9642789.01	1
68	Hex Nut M6	*	4
69	Adjusting Knob M6X45	9642790.01	2
70	Driving Wheel	9642791.01	1
71	Hexagon Set Screw M5X16	*	1
72	Guide Wheel	9642792.01	2
73	Clip Washer D15	*	1
74	Sanding Belt Cover	9642793.01	1
75	Knob	9642794.01	2
76	Sanding Belt (Med)	9601345.00	1
77	Hex Bolt M8X15	*	2
78	Table Support	9642795.01	1
79	Belt Table	9642796.01	1
80	Hexagon Set Screw M5X20	*	1
81	Flat Washer M6	*	1
82	Standard Spring Washer M6	*	1
83	Hexagon Socket Cap Screw M6X10	*	1
84	Power Cord	9642797.01	1
85	Hex Wrench 8 mm	NA	1
86	Hex Wrench 2.5 mm	NA	1
87	Drive Pulley	9642798.01	1
88	Clamp for Miter Gauge	9642799.01	1
89	Philips Screw M4X7	*	4
90	Clamp for Wrench	9642800.01	1

(Δ) Not Shown (*) Standard hardware item available locally (N/A) Not available as replacement part

PALMGREN® a CH Hanson brand

WIRING DIAGRAM - MODEL 9681062 BELT / DISC SANDER

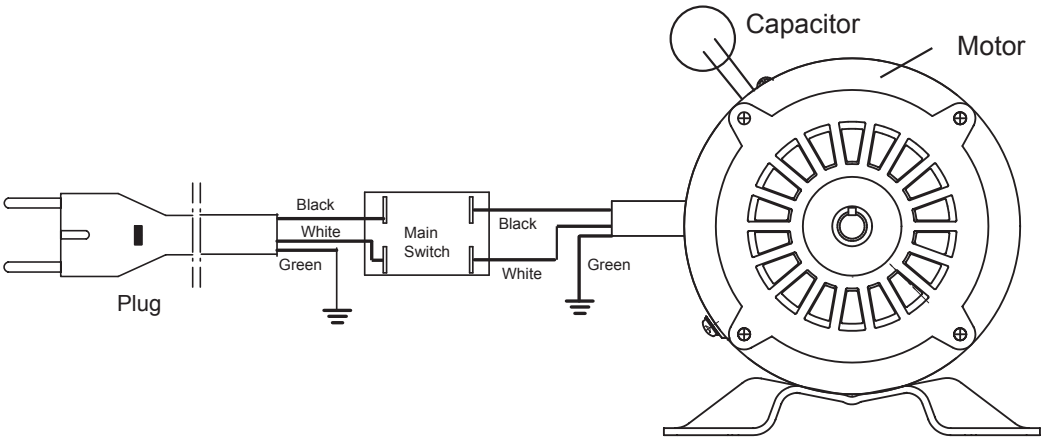

MAINTENANCE

⚠ WARNING ***Always ensure the sander is turned off and unplugged prior to making any adjustments or maintenance to the machine.***

Lubrication of the bearings is not necessary, as they are sealed and pre-lubricated for life. Just replace a bearing if failure occurs. Do not use compressed air near bearings. Simply wipe the exposed bearing surfaces with a dry cloth to clean them.

Service beyond recommended maintenance on these tools should only be performed by an authorized, qualified technician.

Before each use

1. Check the power cord for any damage.
2. Check sanding belts and discs for damage or wear.
3. Check all guards and hardware to make sure they are secure.
4. Check all moving parts for alignment and binding issues.

Before each use

1. Dress/Clean sanding surfaces for best abrasive action.
2. Replace sanding belts or discs when worn or damaged.
3. Clean and vacuum dust from the motor housing and other sander parts.
4. Keep iron tables free of rust. Apply coat of paste wax or silicon spray.

NOTES

PALMGREN WARRANTY

C.H. Hanson / Palmgren warrants their products to be free of defects in material or workmanship. This warranty does not cover defects due directly or indirectly to misuse, abuse, normal wear and tear, failure to properly maintain the product, heated, ground or otherwise altered, or used for a purpose other than that for which is was intended.

The warranty does not cover expendable and/or wear part (i.e. v-belts, screws, abrasives, jaws), damage to tools arising from alteration, abuse or use other than their intended purpose, packing and freight. The duration of this warranty is expressly limited to the terms noted below beginning from the date of delivery to the original user.

The Palmgren branded items carry the following warranties on parts:

All vises, clamps, positioning tables, tombstones, jack screws and vise accessories - LIFETIME.

All bench grinders, drill presses, tapping machines, band saws, lathes, milling machines, arbor presses, abrasive finishing machines and work stands - 3 YEARS.

The obligation of C.H. Hanson / Palmgren is limited solely to the repair or replacement, at our option, at its factory or authorized repair agent of any part that should prove inoperable. Purchaser must lubricate and maintain the product under normal operating conditions at all times. Prior to operation become familiar with product and the included materials, i.e. warnings, cautions and manuals.

Failure to follow these instructions will void the warranty.

This warranty is the purchaser's exclusive remedy against C.H. Hanson for any inoperable parts in its product. Under no circumstances is C.H. Hanson liable for any direct, indirect, incidental , special or consequential damages including loss of profits in any way elated to the use or inability to use our products. This warranty gives you specific legal rights which may vary from state to state.

PALMGREN® a CH Hanson brand

Palmgren - a C.H. Hanson Company
2000 N. Aurora Rd., Naperville, IL 60540 U.S.A.
or call 1-800-827-3398