CAMERA

K-TTSMPFW

5MP Full-collor Turret Network Camera

- 5MP @20fps/4MP real-time image, high resolution, true color
- AHD / TVI / CVI lossless high-defintion video output
- Up to 1500 TVL resolution
- CMOS progressive scan, perfectly capturing the moving object
- Support OSD menu
- Support DWDR
- High speed, long distance and real time transmission
- The LED can be automatically turned on at low illumination
- 20 ~ 30m LED view distance
- Support COC
- Support coaxial audio transmission(Temporarily only valid in TVI signal mode)
- IP67

K-TTSMPFW

5MP HD Full-Color
Turret Camera

SPECIFICATIONS

Model / Specifications	K-TTSMPFW
Camera	
Image Sensor	1 / 2.5 "CMOS
Resolution	5MP
Image Size	2560 x 1936
Video Output	AHD / TVI /CVI
Audio	1CH built-in MIC
Image System	PAL / NTSC
Electronic Shutter	Auto; 1/50s~1/00000s(P); 1/60s~1/100000s(N)
LED View Distance	20 ~30 m
Frame Rate	5MP@20fps /4MP@30fps
Min. Illumination	0 lux with LED ON
Lens	3.6 mm
Lens Mount	M12
S / N Ratio	≥52dB (AGC OFF)
Protection Grade	IP 67
Functions	
Function Control	OSD (COC Control)
Smart LED	Yes
Digital WDR	Yes
Digital NR	Yes, 2D DNR
Global Exposure	Yes
Central Exposure	Yes
AGC	Yes
Auto White Balance	Yes
BLC	Yes
Front Light Compensation	No
Contrast	Yes
Sharpness	Yes
Coaxial audio	Yes
Image Setting	Yes
Defect Correction	Auto
Language	Chinese/English
Angle Adjustment	Pan: 0°~360°; Tilt: 0°~75°; Rotation: 0°~360°
Others	
Power Supply	DC12V (± 10%)
Power Consumption	LED OFF : < 1.5 W; LED ON : < 3W
Working Environment	- 30 °C ~ 50 °C, 10 % ~ 90 % (relative humidity)
Dimensions (mm)	Φ 94.6 x 82.8
Weight (net)	Approx. 0.39KG

DIMENSIONS

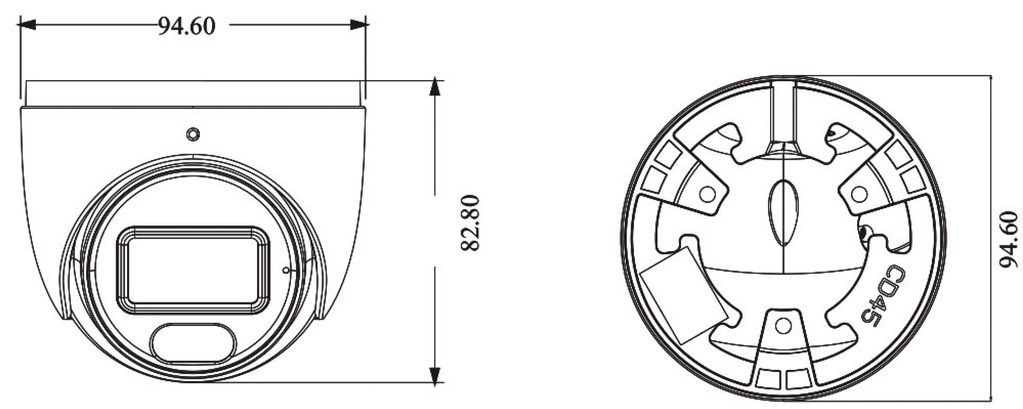

AVAILABLE ACCESSORIES

AVAILABLE MODEL

Available Model	K-TTSMPFW

*All pictures and specifications are for reference only and are subject to change without prior notice.