KS2330,1,3,7,8TKL
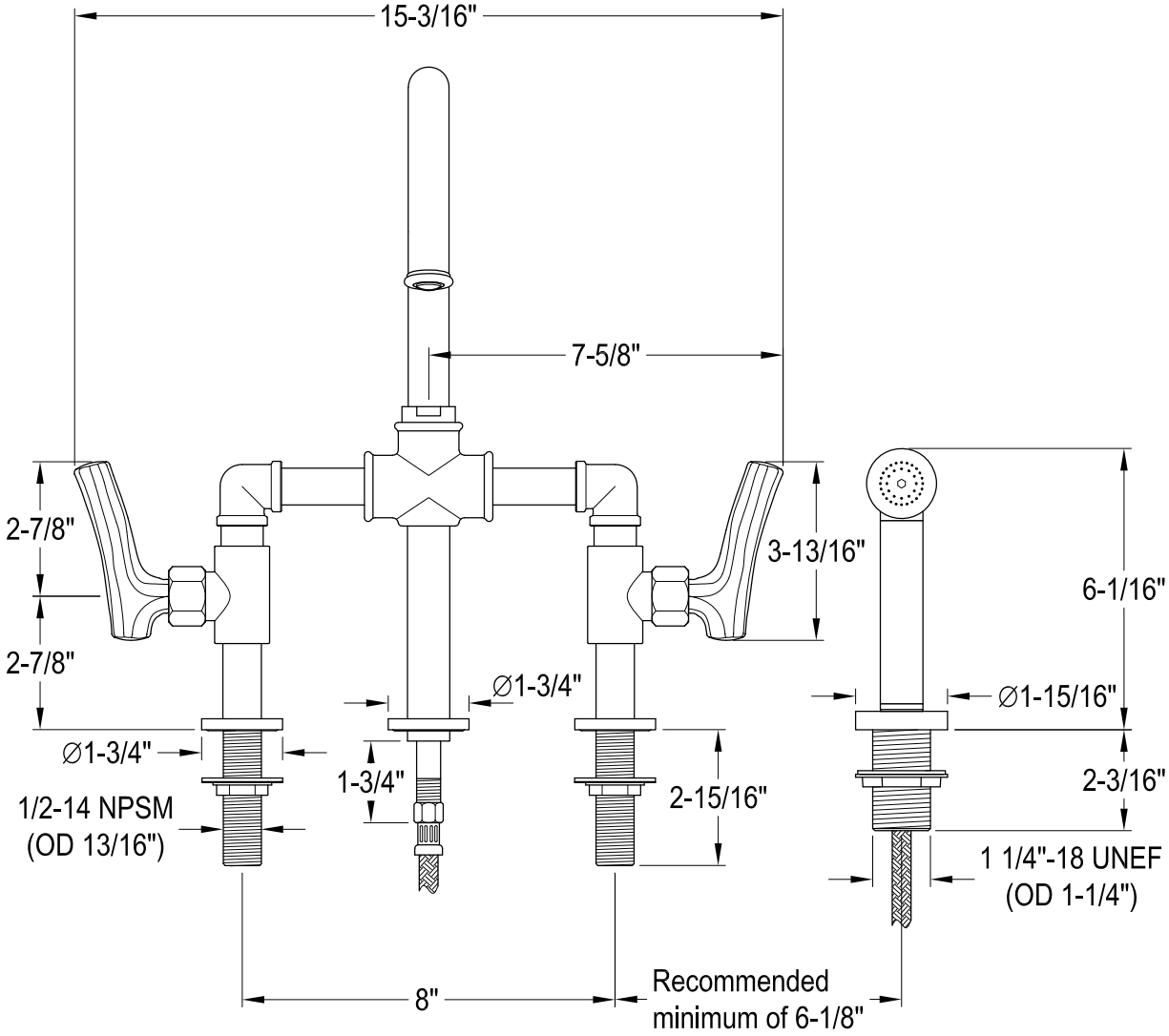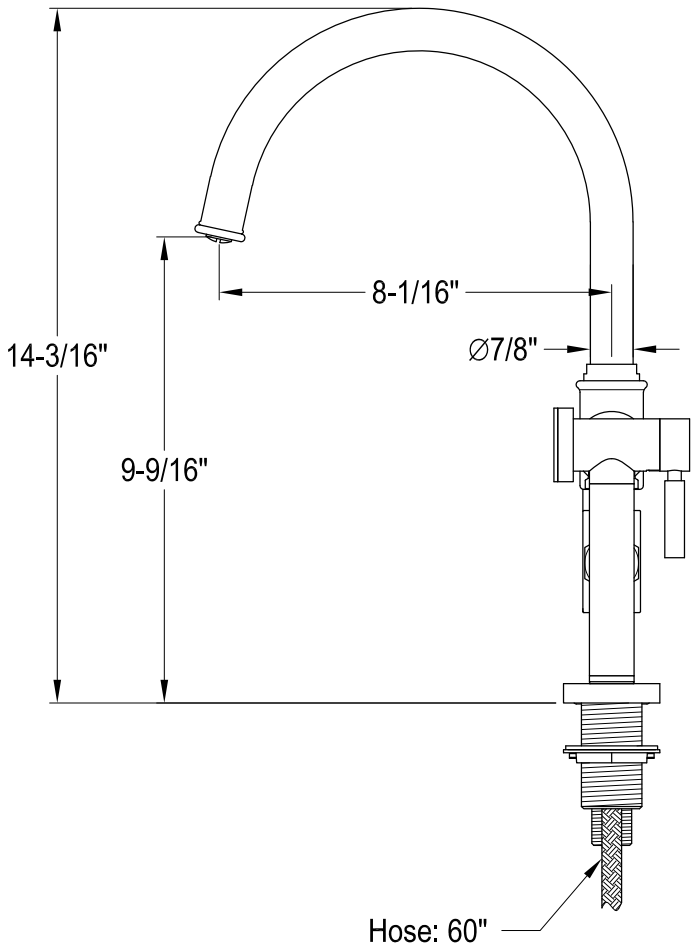
Twin Handles Bridge Kitchen Faucet with Brass Sprayer