KINGSTON

TO ORDER PARTS, CALL: 1-877-252-7277
www.kingstonbrass.com

VTDE552823

55" Acrylic Freestanding Tub with Drain

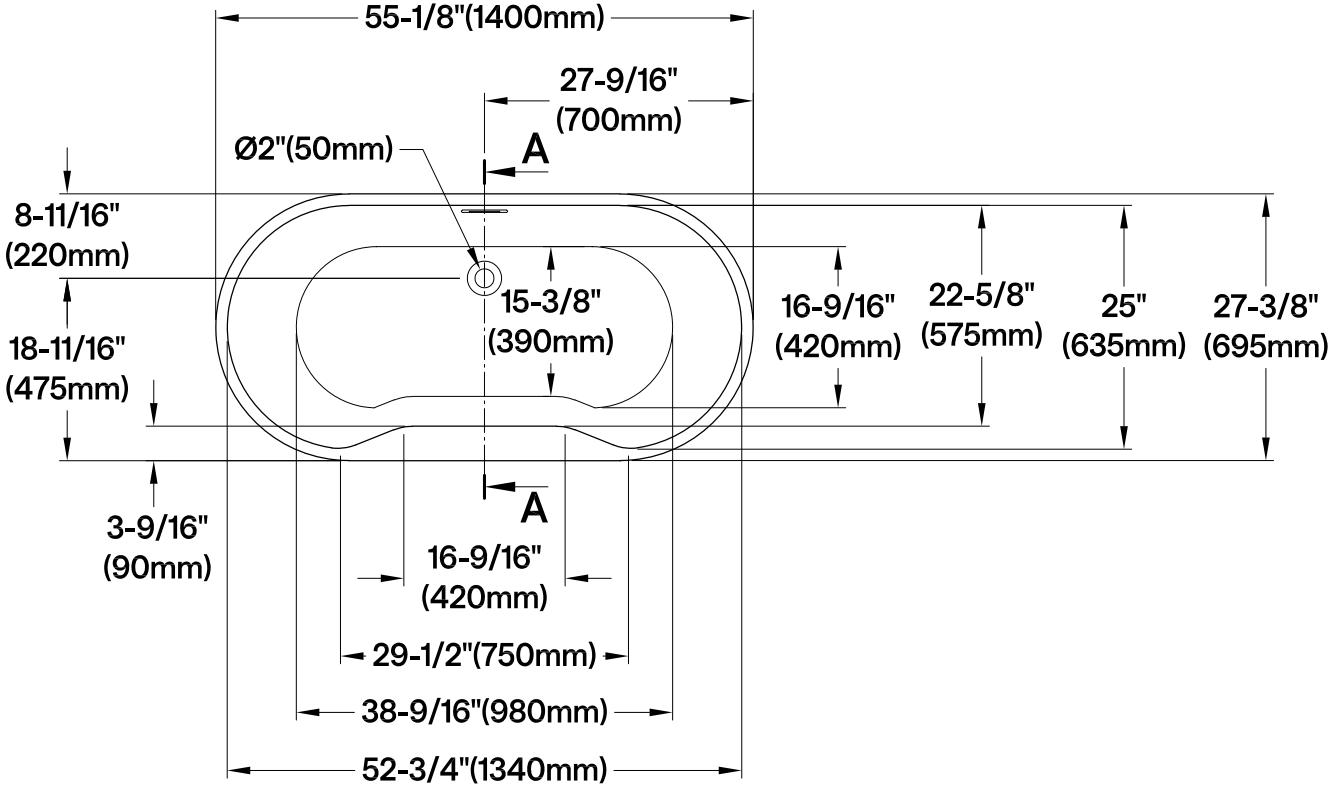

Drain Hole Size
Scale (3:1)

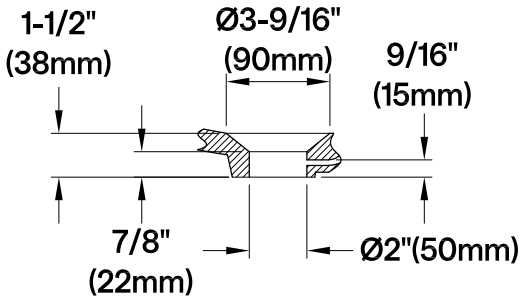

View B
Scale (5:1)

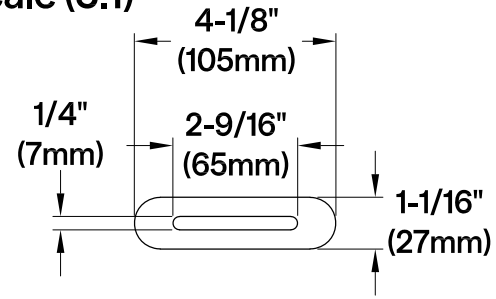

M14 x 120 (4 pcs)
M14 x 100 (1 pc)

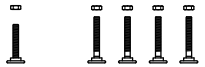

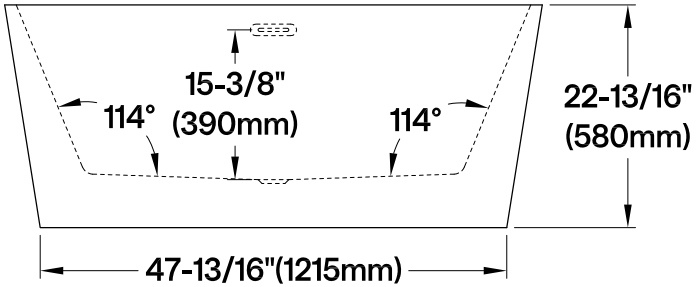

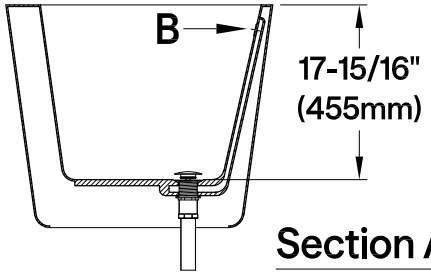

Section A-A

2025-10-B