DASH NO.	M CODE	MADE FROM

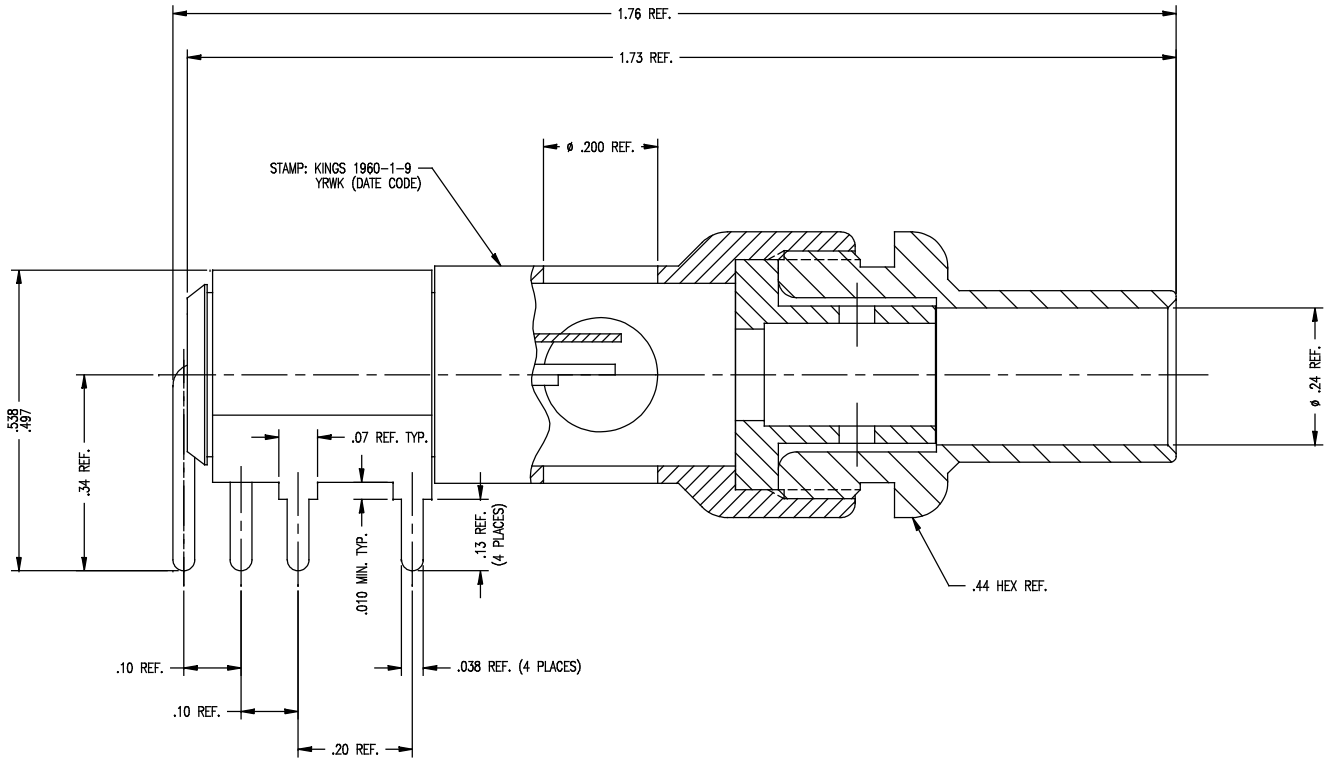

NOTES:
1. FOR USE WITH 11464169 TWINAX CABLE.
2. FOR CABLING INSTRUCTIONS SEE 3-734.
3. MATERIALS:
   INSULATORS: TEFLON, ASTM-D-4894
   BODIES } BRASS, ASTM-B16
   INTER. CONTACT }
   ALL OTHER METAL PARTS: BER. COP., ASTM-B-196
4. FINISHES:
   PCB TABS: TIN/LEAD DIP PER MIS-41177 (85% TIN)
   BODIES: SILVER PLATE ASTM-B700.
   CENTER AND INTER. CONTACTS: HARD GOLD PLATE, PER MIL-G-45204
5. ELECTRICAL CHARACTERISTICS:
   NOMINAL IMPEDANCE: NON-CONSTANT
   VOLTAGE RATING: 400 VRMS
   FREQUENCY RANGE: DC TO 500 MHz
6. MARK PACKAGE: KINGS 1960-1-9
   91836 (CAGE CODE)
   YRWK (DATE CODE)

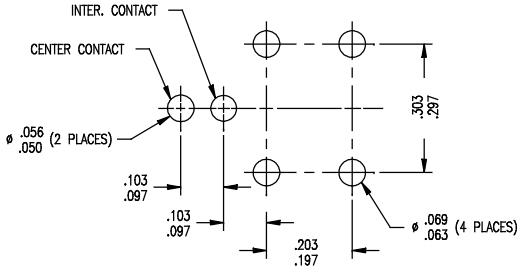

MOUNTING HOLE PATTERN

REVISIONS

ISSUE	CHANGES
0	ER 38753 HVN 01/30/03
1	CN 38900 A HVN 11/03/03
2	CN 39021 A STM 02/18/04
3	CN 39030 E STM 02/24/04
4	CN 39153 C JPK 09/03/04
5	CN 39162 B JPK 09/16/04
6	CN 39174 A JPK 09/28/04
H	MOUNTING HOLE PATTERN .056/.050 WAS .062/.063 .069/.063 WAS .071/.069 UPDATED PER DMF304 KPL 01/05/11 ER30310

SD1960-1-9

1960-1-9S

CUSTOMER
SALES DRAWING

SCALE 6:1	
APPROX SURFACE AREA	
USED ON	
REF: RAYTHEON	

RECEPTACLE, PCB, ANGLE

DRAWN	HVN	DATE	12/02/02
DESIGN	HVN	DATE	11/19/02
APPR.	STM	DATE	12/02/02

KINGS by WINCHESTER ELECTRONICS
Winchester Electronics Corporation
62 Barnes Industrial Road North
Wallingford, Connecticut 06492

SD1960-1-9