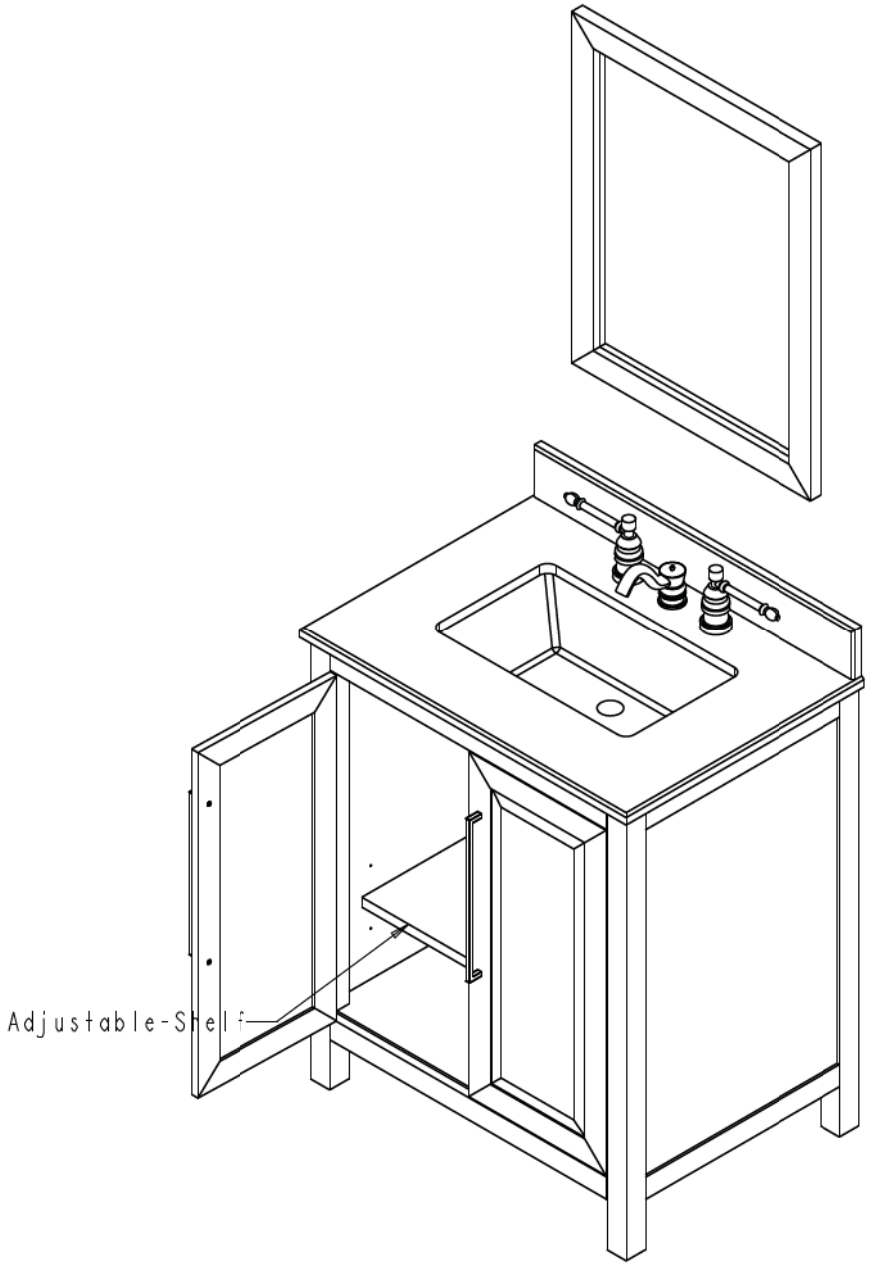

Specification:

1. Material: MDF + Birch
2. Finish: White
3. Hardware: 625-320PC (4 PCS) on the door
   625-3PC (3 PCS) on the drawer
4. Slides: USE15 (3 Sets)
5. Hinge: 700.0536.05 + 600.1233.05
6 Shelf Supports: 1706 (8 PCS)
7. Bowl: H8910WH
8. The tolerance is +/- 1/8"

hardware resources	ITEM#: VAN104-30-T		MATERIAL:
	FINISH:		WEIGHT: 9
			PROJECTION
PROPRIETARY AND CONFIDENTIAL THE INFORMATION CONTAINED IN THIS DRAWING IS THE SOLE PROPERTY OF HARDWARE RESOURCES INC. ANY REPRODUCTION IN PART OR AS A WHOLE WITHOUT THE WRITTEN PREMISSION OF HARDWARE RESOURCES INC. IS PROHIBITED.	TOLERANCE UNLESS OTHERWISE SPECIFIED: X ±0.20 X.X ±0.10 X.XX ±0.05 ANGULAR: ±0.5° DO NOT SCALE DRAWING	UNITS:	DRAWN BY: Hugo.cai / DATE: 03-24-16
		SIZE:	APPROVED BY: / DATE:
		SHEET:	RELEASE LEVEL: / REVISION:

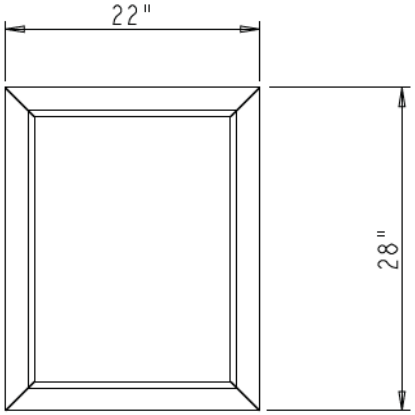

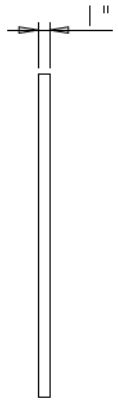

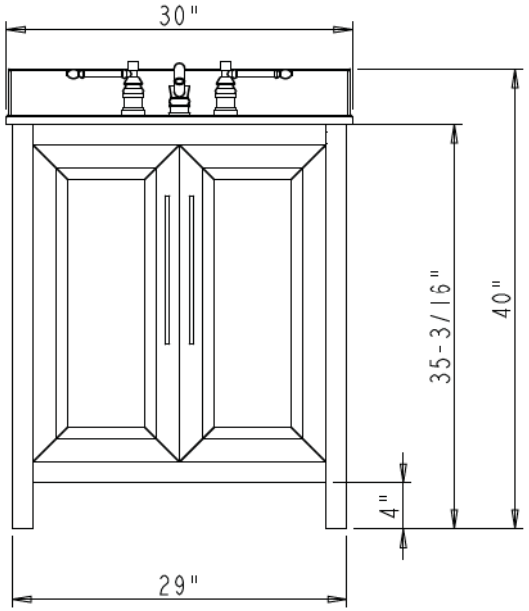

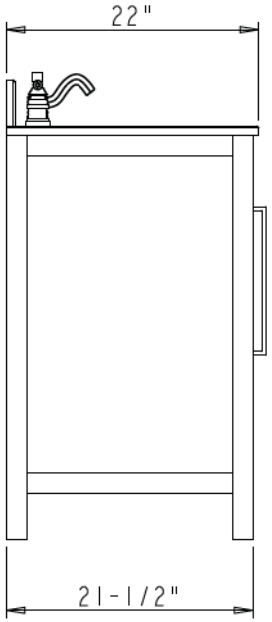

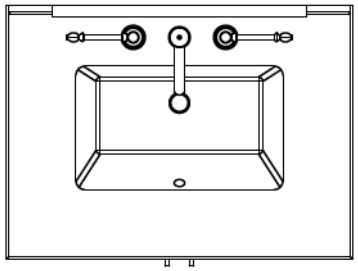

hardware resources

PROPRIETARY AND CONFIDENTIAL

THE INFORMATION CONTAINED IN THIS DRAWING IS THE SOLE PROPERTY OF HARDWARE RESOURCES INC. ANY REPRODUCTION IN PART OR AS A WHOLE WITHOUT THE WRITTEN PREMISSION OF HARDWARE RESOURCES INC. IS PROHIBITED.

ITEM#: VAN104-30-T			MATERIAL:
FINISH:			WEIGHT: 9
			PROJECTION
TOLERANCE UNLESS OTHERWISE SPECIFIED: x ±0.20, x.x ±0.10, x.xx ±0.05, ANGULAR: ±0.5°	UNITS:	DRAWN BY: Hugo.cai	DATE: 03-24-16
	SIZE:	APPROVED BY:	DATE:
DO NOT SCALE DRAWING	SHEET:	RELEASE LEVEL:	REVISION:

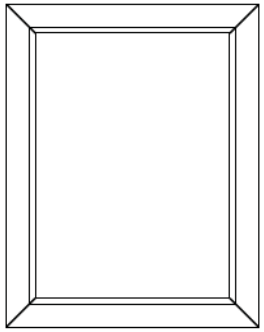

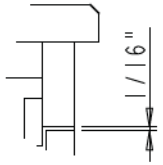

DETAIL A
SCALE 1:4

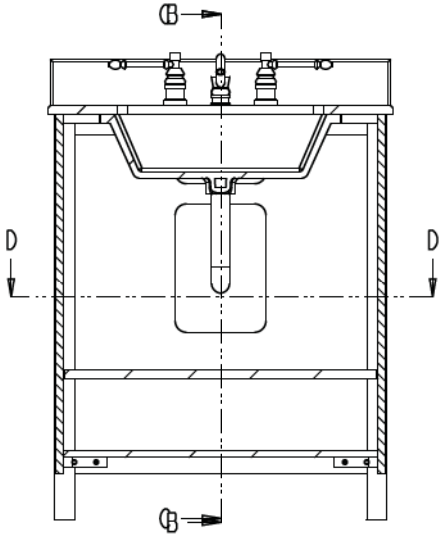

SECTION A-A

SEE DETAIL A

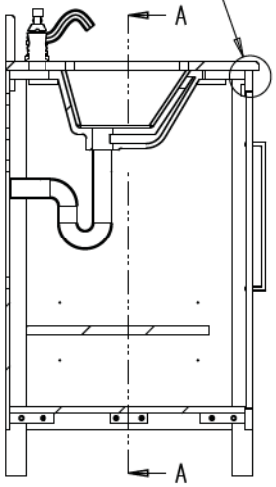

SECTION B-B

SEE DETAIL B

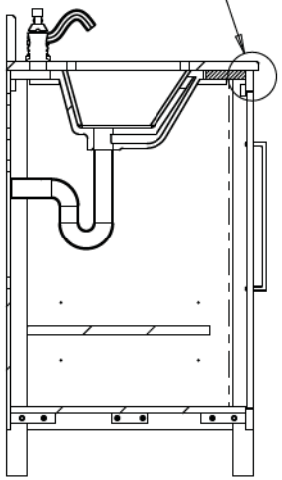

SECTION C-C

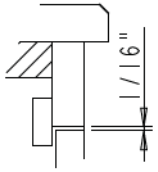

DETAIL B
SCALE 1:4

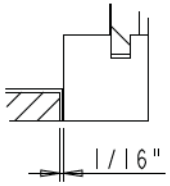

DETAIL C
SCALE 1:4

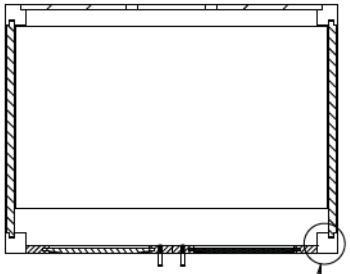

SEE DETAIL C

SECTION D-D

hardware resources	ITEM#: VAN104-30-T		MATERIAL:
	FINISH:		WEIGHT: 9
			PROJECTION
PROPRIETARY AND CONFIDENTIAL THE INFORMATION CONTAINED IN THIS DRAWING IS THE SOLE PROPERTY OF HARDWARE RESOURCES INC. ANY REPRODUCTION IN PART OR AS A WHOLE WITHOUT THE WRITTEN PREMISSION OF HARDWARE RESOURCES INC. IS PROHIBITED.	TOLERANCE UNLESS OTHERWISE SPECIFIED: X ±0.20 X.X ±0.10 X.XX ±0.05 ANGULAR: ±0.5° DO NOT SCALE DRAWING	UNITS:	DRAWN BY: Hugo.cai / DATE: 03-24-16
		SIZE:	APPROVED BY: / DATE:
		SHEET:	RELEASE LEVEL: / REVISION:

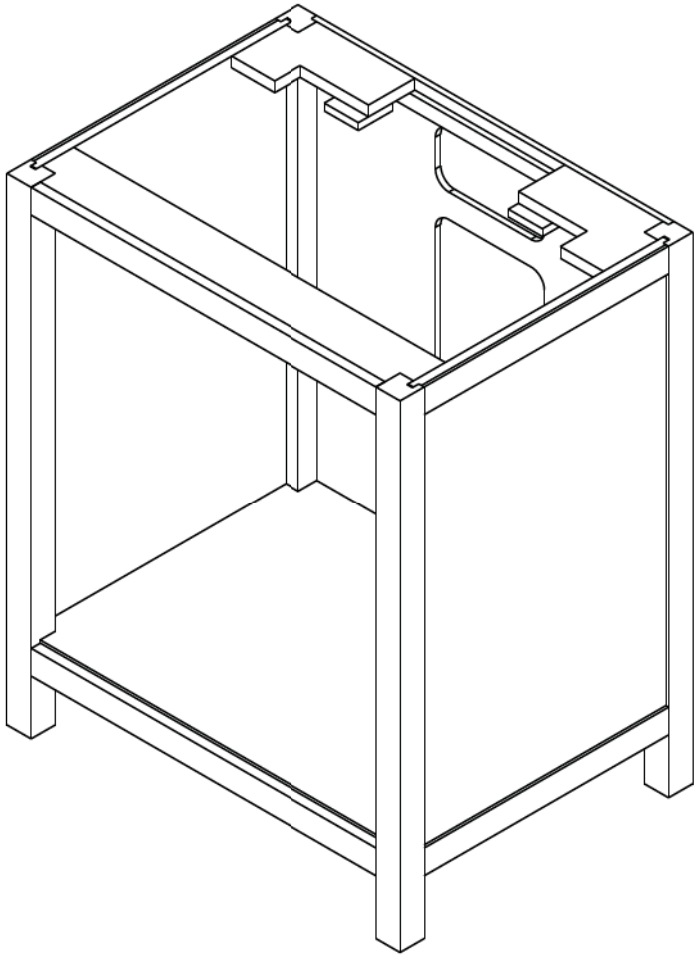

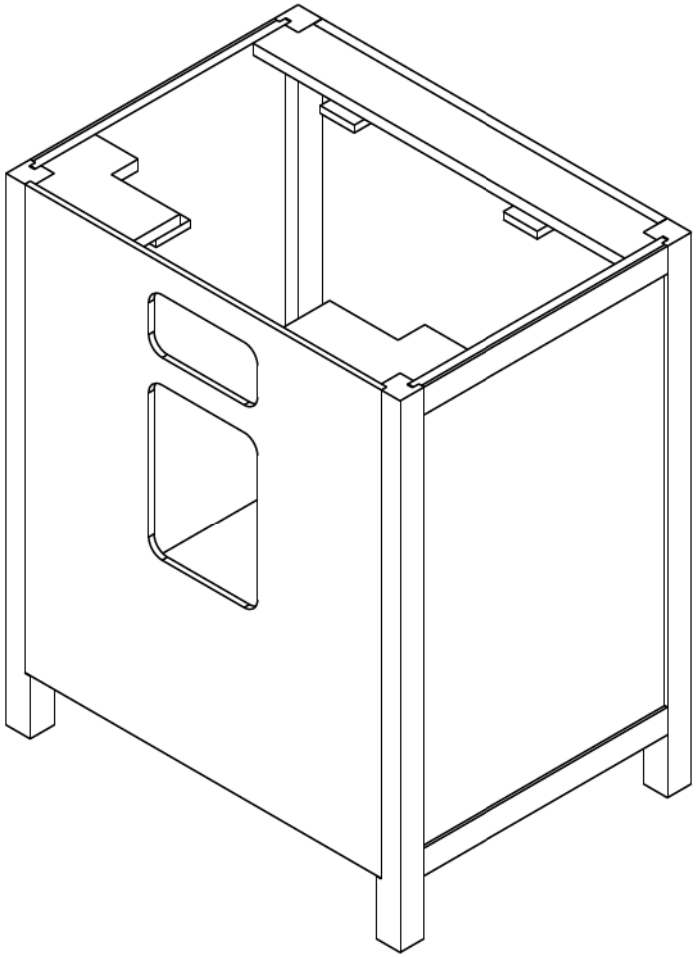

hardware resources

PROPRIETARY AND CONFIDENTIAL

THE INFORMATION CONTAINED IN THIS DRAWING IS THE SOLE PROPERTY OF HARDWARE RESOURCES INC. ANY REPRODUCTION IN PART OR AS A WHOLE WITHOUT THE WRITTEN PERMISSION OF HARDWARE RESOURCES INC. IS PROHIBITED.

ITEM#: CABINET-30-T			MATERIAL:
FINISH:			WEIGHT: 9
			PROJECTION
TOLERANCE UNLESS OTHERWISE SPECIFIED: X ±0.20, X.X ±0.10, X.XX ±0.05, ANGULAR: ±0.5°	UNITS:	DRAWN BY: Hugo.cai	DATE: 03-24-16
	SIZE:	APPROVED BY:	DATE:
DO NOT SCALE DRAWING	SHEET:	RELEASE LEVEL:	REVISION:

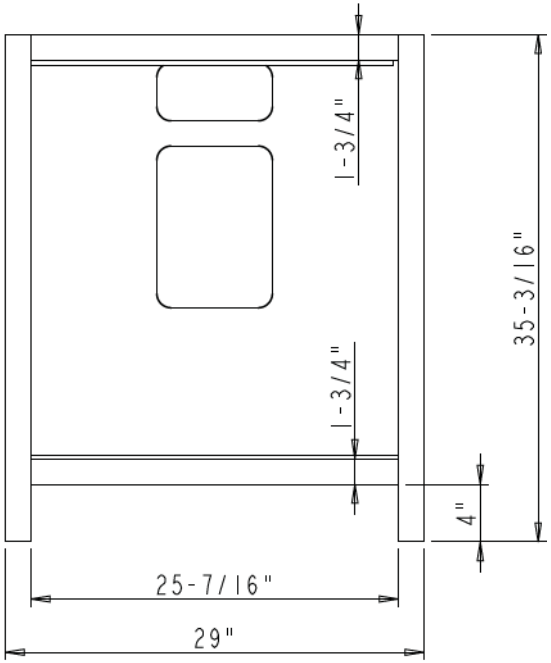

FRONT VIEW

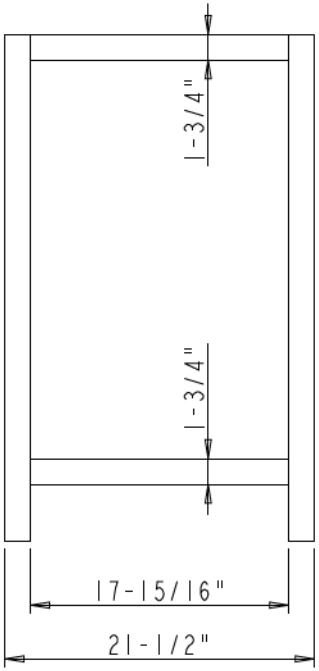

SIDE VIEW

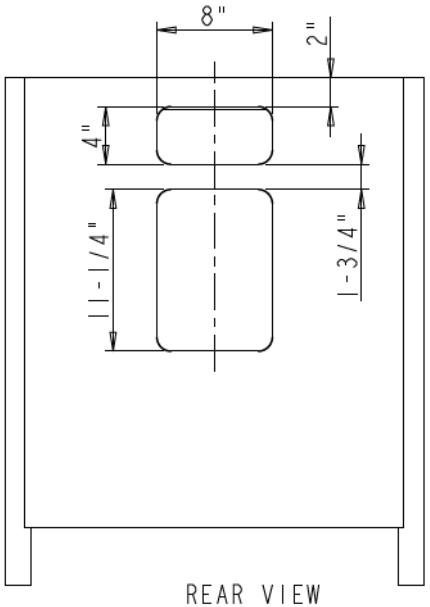

REAR VIEW

hardware resources

PROPRIETARY AND CONFIDENTIAL

THE INFORMATION CONTAINED IN THIS DRAWING IS THE SOLE PROPERTY OF HARDWARE RESOURCES INC. ANY REPRODUCTION IN PART OR AS A WHOLE WITHOUT THE WRITTEN PREMISSION OF HARDWARE RESOURCES INC. IS PROHIBITED.

ITEM#: CABINET-30-T			MATERIAL:
FINISH:			WEIGHT: 9
			PROJECTION
TOLERANCE UNLESS OTHERWISE SPECIFIED: X ±0.20, X.X ±0.10, X.XX ±0.05, ANGULAR: ±0.5°	UNITS:	DRAWN BY: Hugo.cai	DATE: 03-24-16
	SIZE:	APPROVED BY:	DATE:
DO NOT SCALE DRAWING	SHEET:	RELEASE LEVEL:	REVISION:

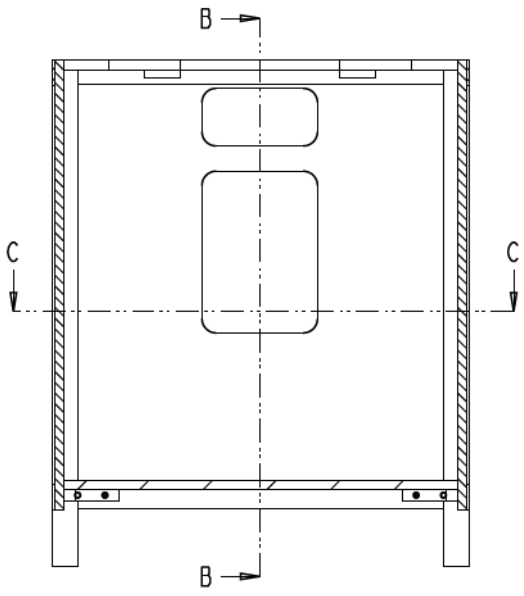

SECTION A-A

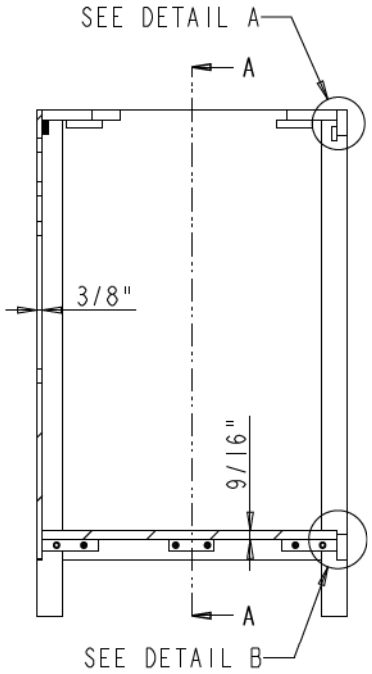

SECTION B-B

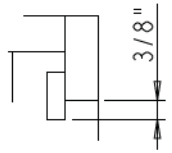

DETAIL A
SCALE (1:4)

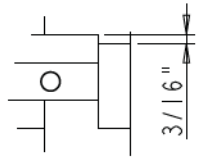

DETAIL B
SCALE (1:4)

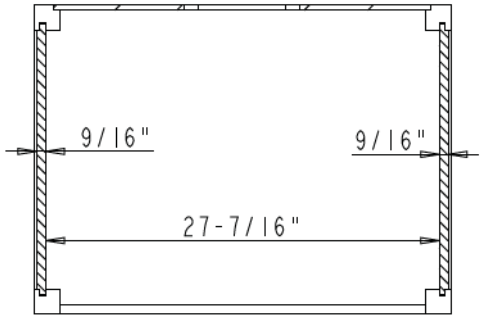

SECTION C-C

hardware resources

PROPRIETARY AND CONFIDENTIAL

THE INFORMATION CONTAINED IN THIS DRAWING IS THE SOLE PROPERTY OF HARDWARE RESOURCES INC. ANY REPRODUCTION IN PART OR AS A WHOLE WITHOUT THE WRITTEN PREMISSION OF HARDWARE RESOURCES INC. IS PROHIBITED.

ITEM#: CABINET-30-T			MATERIAL:
FINISH:			WEIGHT: 9
			PROJECTION
TOLERANCE UNLESS OTHERWISE SPECIFIED: x ±0.20, x.x ±0.10, x.xx ±0.05, ANGULAR: ±0.5°	UNITS:	DRAWN BY: Hugo.cai	DATE: 03-24-16
	SIZE:	APPROVED BY:	DATE:
DO NOT SCALE DRAWING	SHEET:	RELEASE LEVEL:	REVISION:

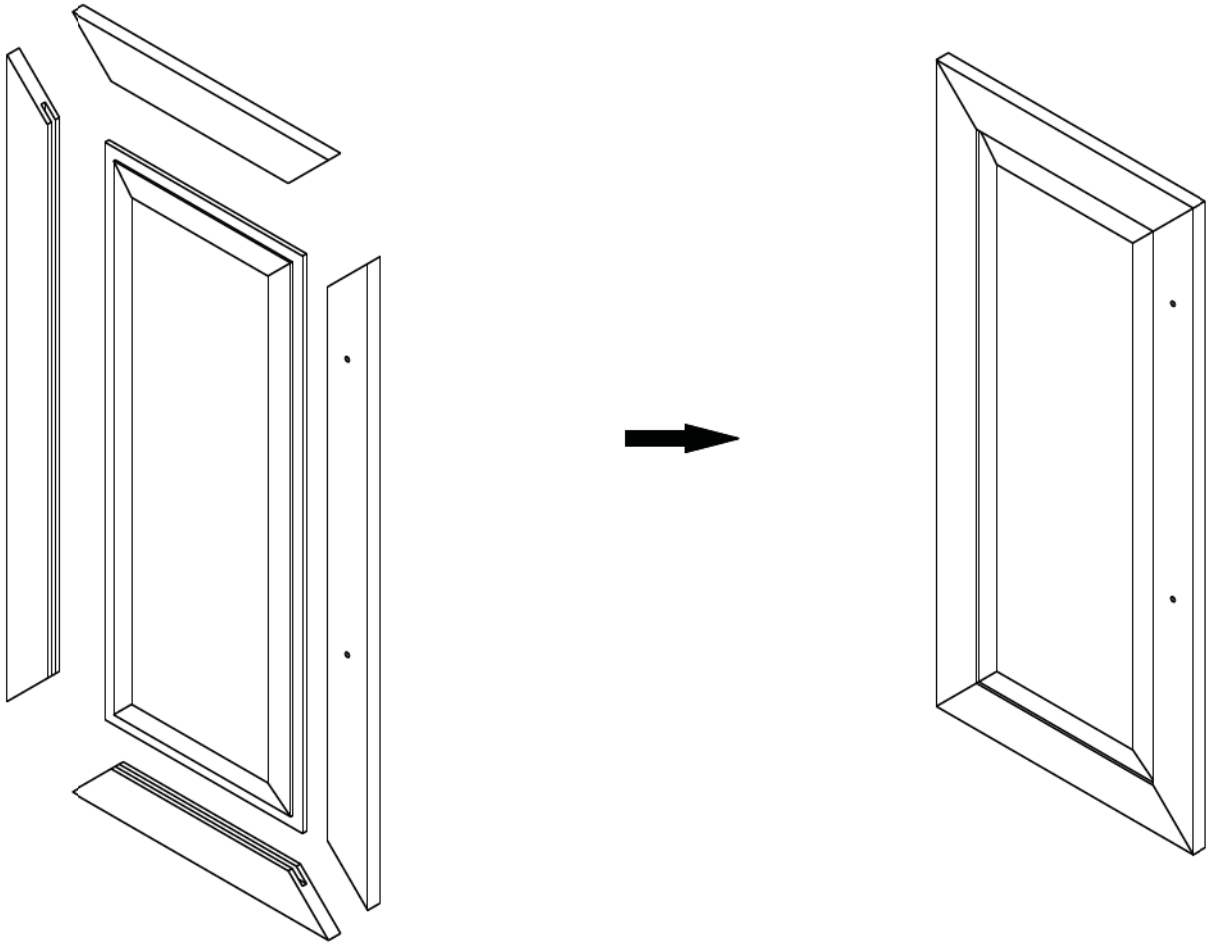

hardware resources	ITEM#: DOOR-30L		MATERIAL:
	FINISH:		WEIGHT: g
			PROJECTION
PROPRIETARY AND CONFIDENTIAL THE INFORMATION CONTAINED IN THIS DRAWING IS THE SOLE PROPERTY OF HARDWARE RESOURCES INC. ANY REPRODUCTION IN PART OR AS A WHOLE WITHOUT THE WRITTEN PERMISSION OF HARDWARE RESOURCES INC. IS PROHIBITED.	TOLERANCE UNLESS OTHERWISE SPECIFIED: X ±0.30 X.X ±0.10 X.XX ±0.05 ANGULAR: ±0.5° DO NOT SCALE DRAWING	UNITS:	DRAWN BY: Hugo.cai / DATE: 03-24-16
		SIZE: A4	APPROVED BY: / DATE:
		SHEET: 1 OF 2	RELEASE LEVEL: / REVISION:

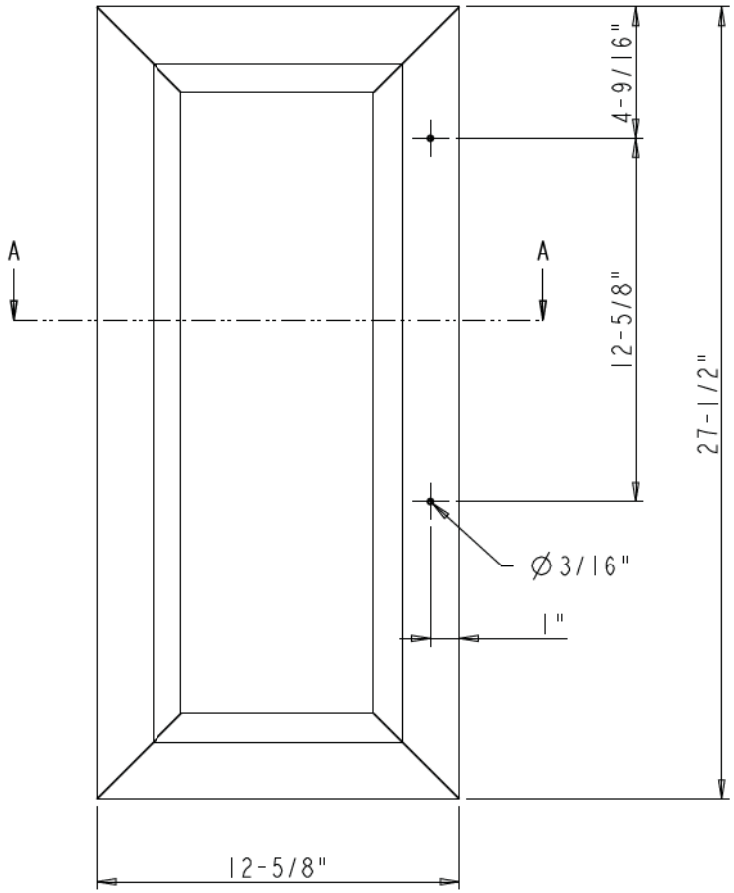

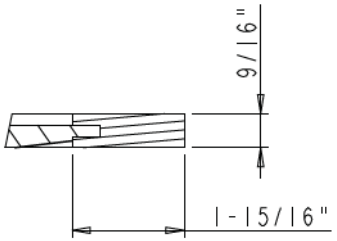

DETAIL A
SCALE 3:10

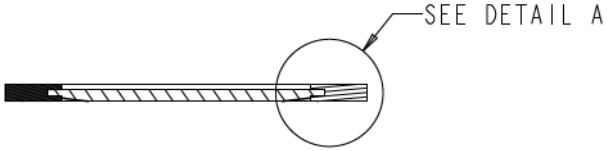

SECTION A-A

hardware resources	ITEM#: DOOR-30L		MATERIAL:
	FINISH:		WEIGHT: g
PROPRIETARY AND CONFIDENTIAL			PROJECTION
THE INFORMATION CONTAINED IN THIS DRAWING IS THE SOLE PROPERTY OF HARDWARE RESOURCES INC. ANY REPRODUCTION IN PART OR AS A WHOLE WITHOUT THE WRITTEN PERMISSION OF HARDWARE RESOURCES INC. IS PROHIBITED.	TOLERANCE UNLESS OTHERWISE SPECIFIED: X ±0.30 X.X ±0.10 X.XX ±0.05 ANGULAR: ±0.5° DO NOT SCALE DRAWING	UNITS:	DRAWN BY: Hugo.cai / DATE: 03-24-16
		SIZE:	APPROVED BY: / DATE:
		SHEET:	RELEASE LEVEL: / REVISION:

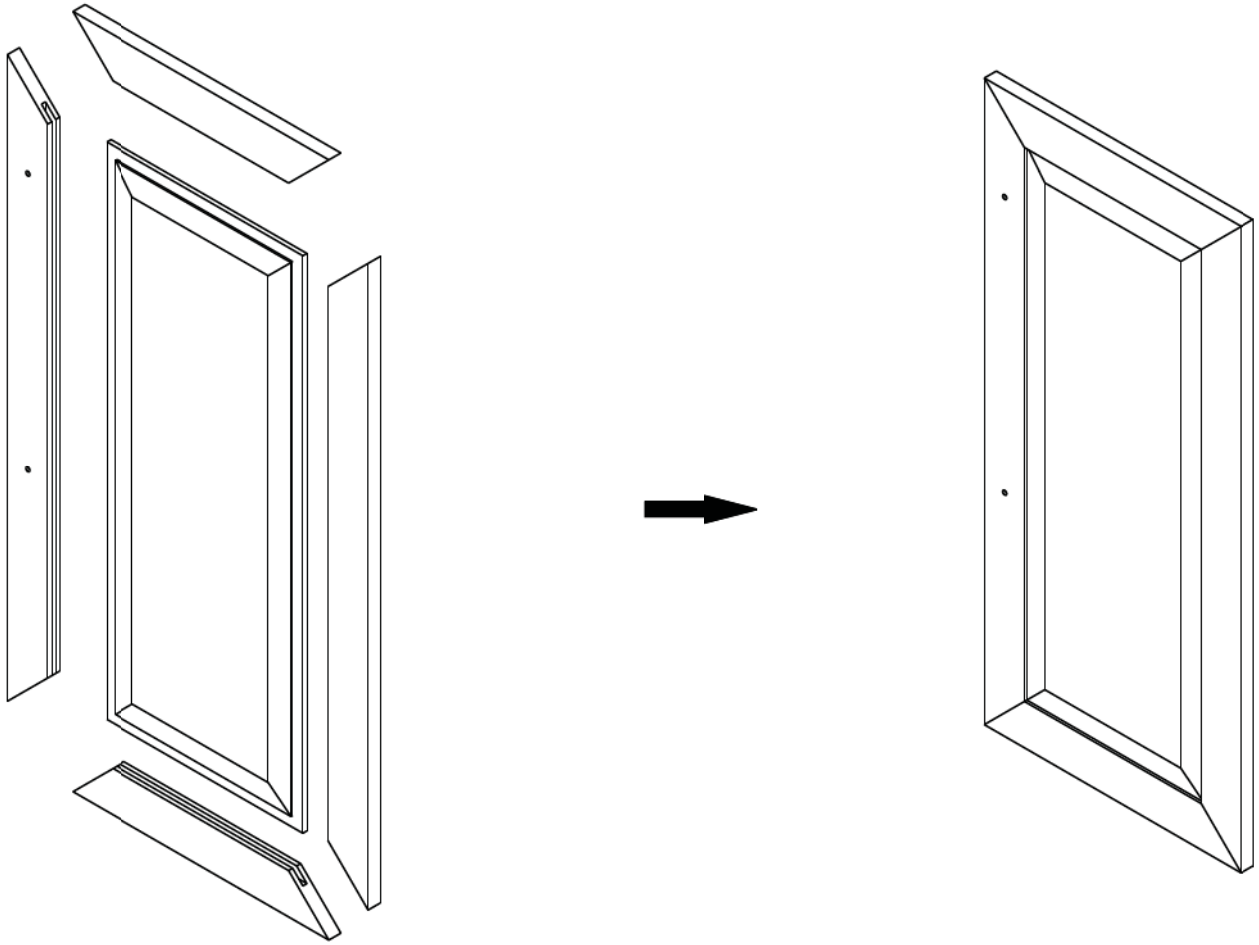

hardware resources	ITEM#: DOOR-30R		MATERIAL:
	FINISH:		WEIGHT: g
			PROJECTION
PROPRIETARY AND CONFIDENTIAL THE INFORMATION CONTAINED IN THIS DRAWING IS THE SOLE PROPERTY OF HARDWARE RESOURCES INC. ANY REPRODUCTION IN PART OR AS A WHOLE WITHOUT THE WRITTEN PERMISSION OF HARDWARE RESOURCES INC. IS PROHIBITED.	TOLERANCE UNLESS OTHERWISE SPECIFIED: X ±0.30 X.X ±0.10 X.XX ±0.05 ANGULAR: ±0.5° DO NOT SCALE DRAWING	UNITS:	DRAWN BY: Hugo.cai DATE: 03-24-16
		SIZE: A4	APPROVED BY: DATE:
		SHEET: 1 OF 2	RELEASE LEVEL: REVISION:

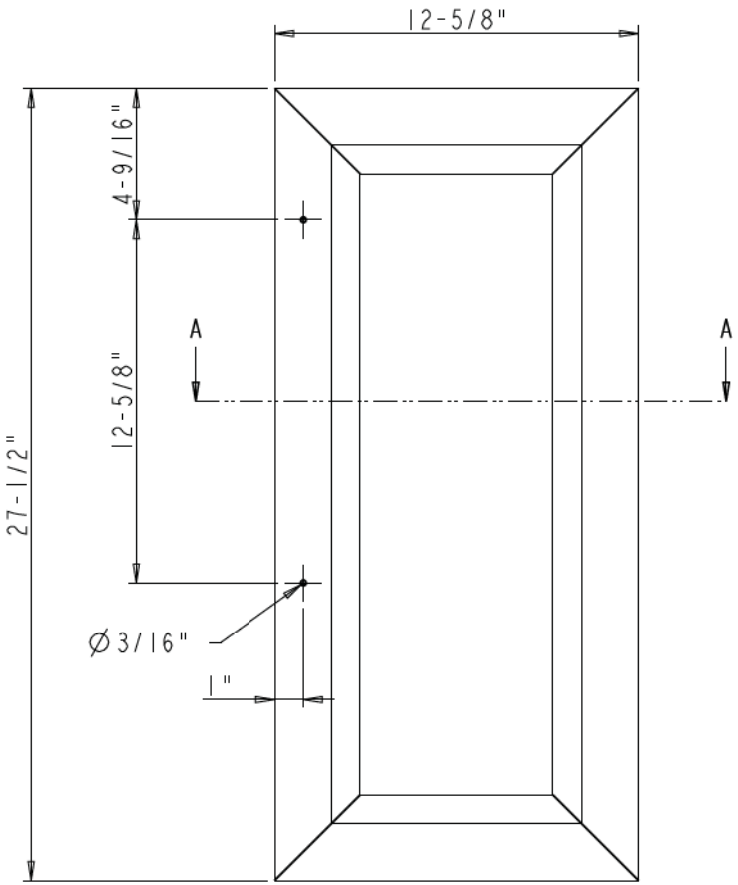

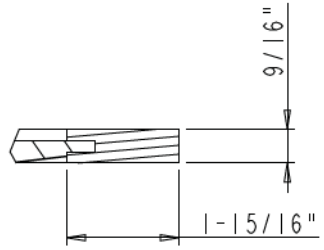

DETAIL A
SCALE (3:10)

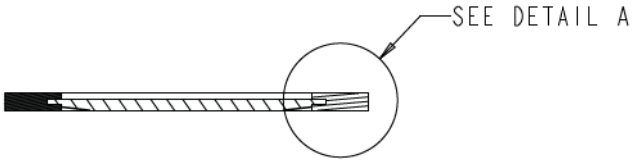

SECTION A-A

hardware resources

PROPRIETARY AND CONFIDENTIAL

THE INFORMATION CONTAINED IN THIS DRAWING IS THE SOLE PROPERTY OF HARDWARE RESOURCES INC. ANY REPRODUCTION IN PART OR AS A WHOLE WITHOUT THE WRITTEN PERMISSION OF HARDWARE RESOURCES INC. IS PROHIBITED.

ITEM#: DOOR-30R			MATERIAL:
FINISH:			WEIGHT: g
			PROJECTION
TOLERANCE UNLESS OTHERWISE SPECIFIED: X ±0.30, X.X ±0.10, X.XX ±0.05, ANGULAR: ±0.5°	UNITS:	DRAWN BY: Hugo.cai	DATE: 03-24-16
	SIZE:	APPROVED BY:	DATE:
DO NOT SCALE DRAWING	SHEET:	RELEASE LEVEL:	REVISION:

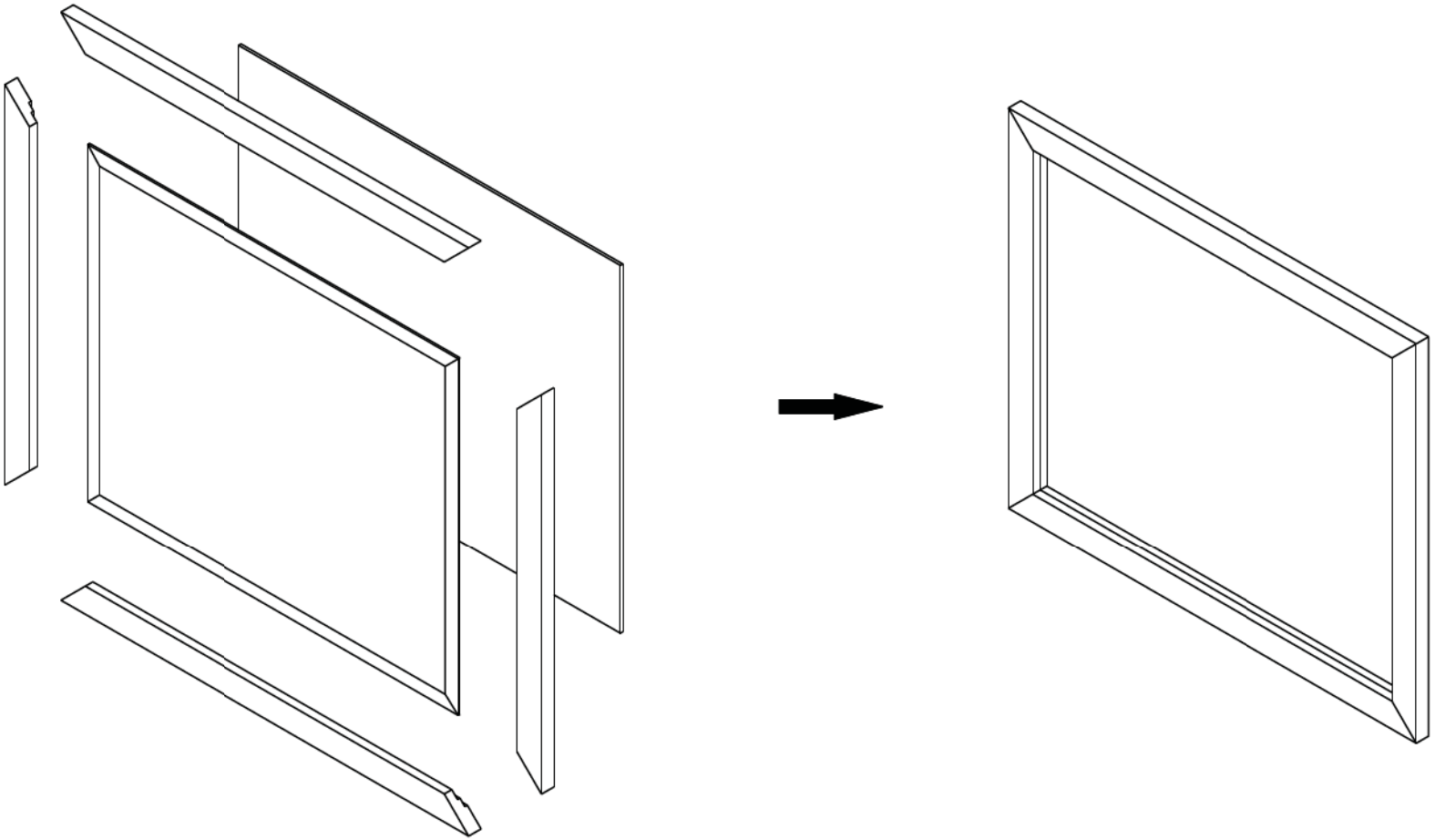

hardware resources	ITEM#: MIRROR		MATERIAL:
	FINISH:		WEIGHT: 9
			PROJECTION
PROPRIETARY AND CONFIDENTIAL THE INFORMATION CONTAINED IN THIS DRAWING IS THE SOLE PROPERTY OF HARDWARE RESOURCES INC. ANY REPRODUCTION IN PART OR AS A WHOLE WITHOUT THE WRITTEN PREMISSION OF HARDWARE RESOURCES INC. IS PROHIBITED.	TOLERANCE UNLESS OTHERWISE SPECIFIED: X ±0.20 X.X ±0.10 X.XX ±0.05 ANGULAR: ±0.5° DO NOT SCALE DRAWING	UNITS:	DRAWN BY: Hugo.cai / DATE: 06-23-15
		SIZE:	APPROVED BY: / DATE:
		SHEET:	RELEASE LEVEL: / REVISION:

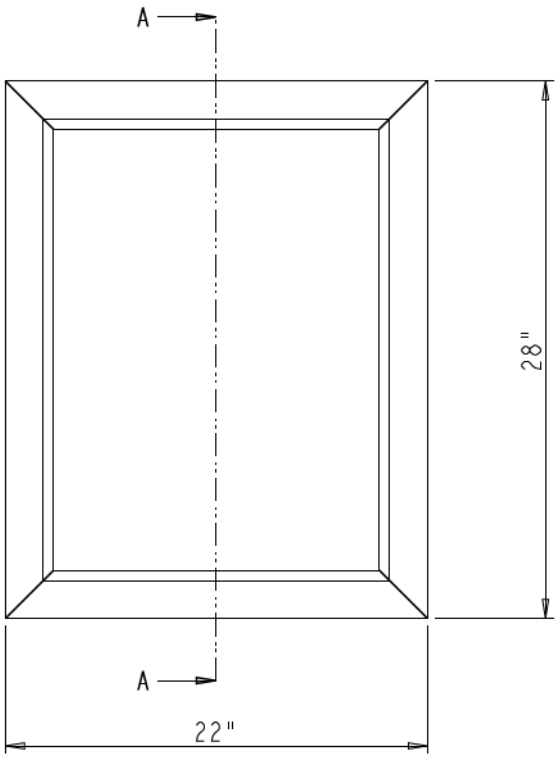

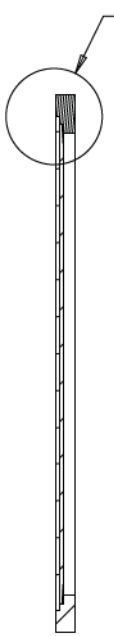

SECTION A-A

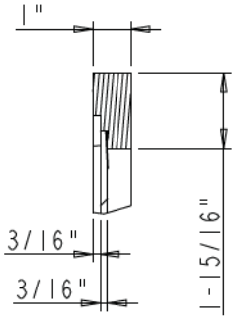

DETAIL B
SCALE 1:5

hardware resources	ITEM#: MIRROR-22		MATERIAL:
	FINISH:		WEIGHT: 9
			PROJECTION
PROPRIETARY AND CONFIDENTIAL THE INFORMATION CONTAINED IN THIS DRAWING IS THE SOLE PROPERTY OF HARDWARE RESOURCES INC. ANY REPRODUCTION IN PART OR AS A WHOLE WITHOUT THE WRITTEN PREMISSION OF HARDWARE RESOURCES INC. IS PROHIBITED.	TOLERANCE UNLESS OTHERWISE SPECIFIED: X ±0.20 X.X ±0.10 X.XX ±0.05 ANGULAR: ±0.5° DO NOT SCALE DRAWING	UNITS:	DRAWN BY: Hugo.cai / DATE: 03-24-16
		SIZE:	APPROVED BY: / DATE:
		SHEET:	RELEASE LEVEL: / REVISION:

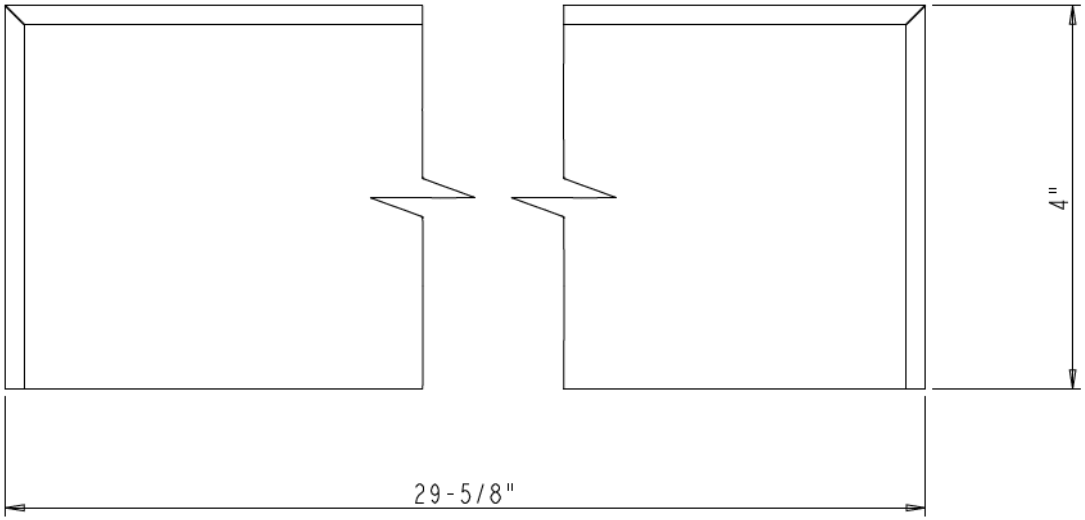

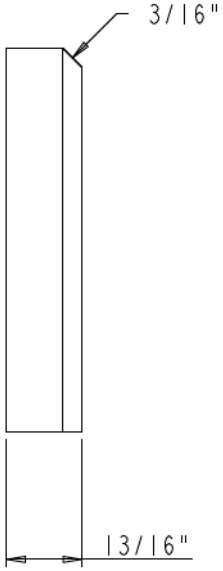

hardware resources

PROPRIETARY AND CONFIDENTIAL

THE INFORMATION CONTAINED IN THIS DRAWING IS THE SOLE PROPERTY OF HARDWARE RESOURCES INC. ANY REPRODUCTION IN PART OR AS A WHOLE WITHOUT THE WRITTEN PREMISSION OF HARDWARE RESOURCES INC. IS PROHIBITED.

ITEM#: SPLASH-29			MATERIAL:
FINISH:			WEIGHT: g
			PROJECTION
TOLERANCE UNLESS OTHERWISE SPECIFIED: X ±0.20, X.X ±0.10, X.XX ±0.05, ANGULAR: ±0.5°	UNITS:	DRAWN BY: Hugo.cai	DATE: 03-24-16
	SIZE:	APPROVED BY:	DATE:
DO NOT SCALE DRAWING	SHEET:	RELEASE LEVEL:	REVISION:

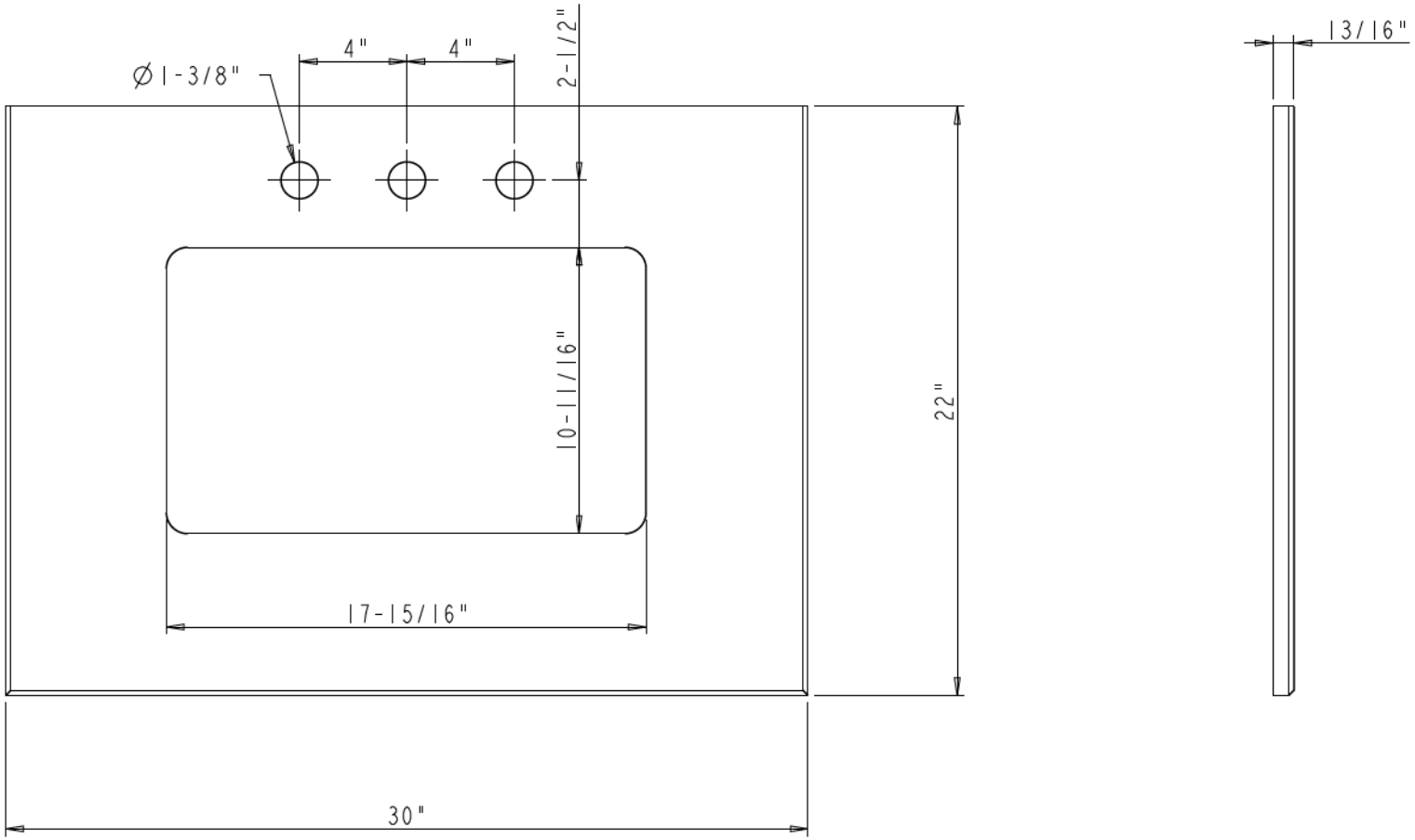

hardware resources

PROPRIETARY AND CONFIDENTIAL

THE INFORMATION CONTAINED IN THIS DRAWING IS THE SOLE PROPERTY OF HARDWARE RESOURCES INC. ANY REPRODUCTION IN PART OR AS A WHOLE WITHOUT THE WRITTEN PREMISSION OF HARDWARE RESOURCES INC. IS PROHIBITED.

ITEM#: TOP-BOARD-30			MATERIAL:
FINISH:			WEIGHT: 9
			PROJECTION
TOLERANCE UNLESS OTHERWISE SPECIFIED: X ±0.20, X.X ±0.10, X.XX ±0.05, ANGULAR: ±0.5°	UNITS:	DRAWN BY: Hugo.cai	DATE: 03-24-16
	SIZE:	APPROVED BY:	DATE:
DO NOT SCALE DRAWING	SHEET:	RELEASE LEVEL:	REVISION:

hardware resources

PROPRIETARY AND CONFIDENTIAL

THE INFORMATION CONTAINED IN THIS DRAWING IS THE SOLE PROPERTY OF HARDWARE RESOURCES INC. ANY REPRODUCTION IN PART OR AS A WHOLE WITHOUT THE WRITTEN PREMISSION OF HARDWARE RESOURCES INC. IS PROHIBITED.

ITEM#: ADJUSTABLE-SHELF-30			MATERIAL:
FINISH:			WEIGHT: 9
			PROJECTION
TOLERANCE UNLESS OTHERWISE SPECIFIED: X ±0.20, X.X ±0.10, X.XX ±0.05, ANGULAR: ±0.5° DO NOT SCALE DRAWING	UNITS:	DRAWN BY: Hugo.cai	DATE: 03-24-16
	SIZE:	APPROVED BY:	DATE:
	SHEET:	RELEASE LEVEL:	REVISION: