SHIMANO

SARAGOSA

SRG18000SWAHG

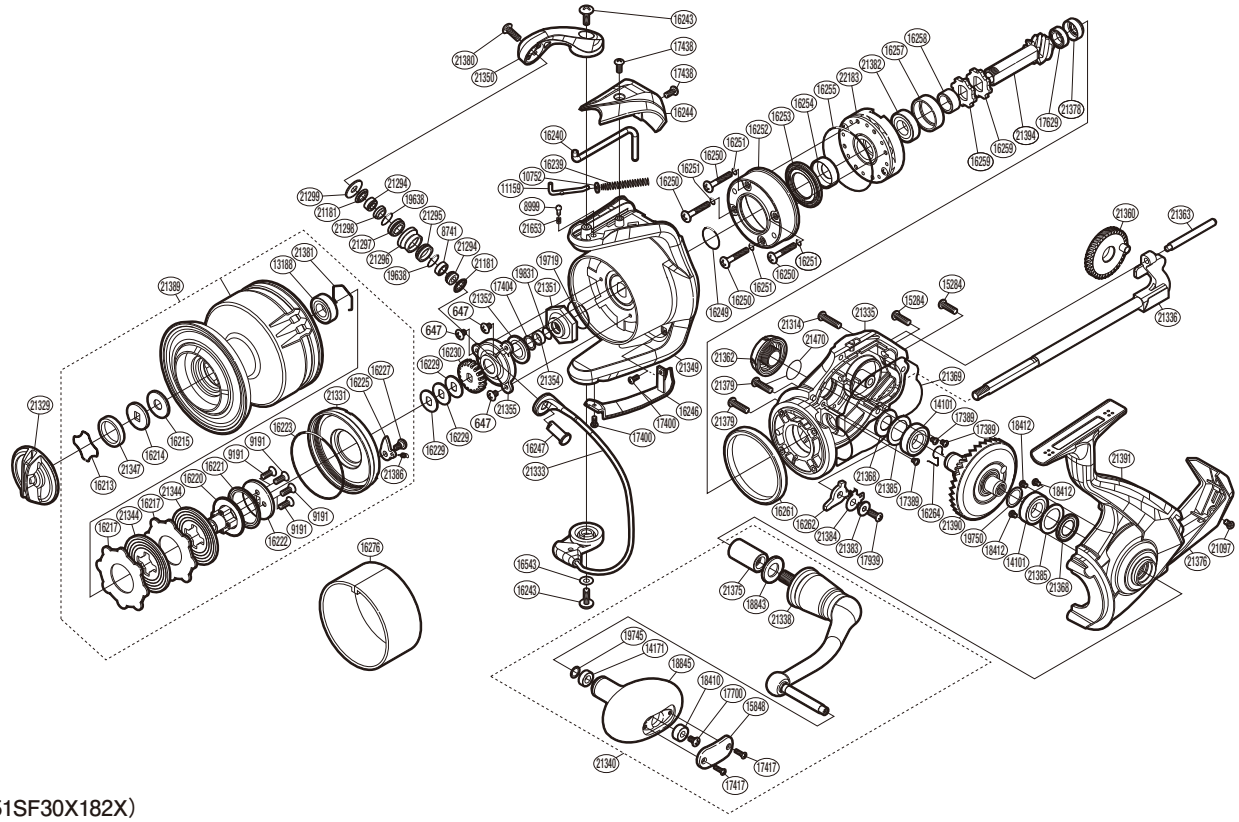

(51SF30X182X)

#	Part No.	Description	#	Part No.	Description	#	Part No.	Description
647	10QG5	Screw	16258	10BBV	Pinion Gear Collar	21338	10RJ9	Handle Shank Assembly
8741	10K67	Ball Bearing	16259	107ZQ	Anti-Reverse Ratchet	21340	10RQT	Handle Assembly
8999	10HEA	Click Pin	16261	104G9	Friction Ring	21344	10RQ2	Spool Drag Disk
9191	10ML9	Screw	16262	10J3T	Assist Anti-Reverse Pawl	21347	10RQD	Thrust Bushing
10752	10TYE	Bail Spring Guide A Collar	16264	1067B	Anti-Reverse Pawl Spring	21349	10RQ3	Rotor
11159	105LV	Bail Spring Guide A	16543	10G4W	Washer	21350	10RQU	Bail Arm
13188	10BGD	Ball Bearing	17389	10LHN	Screw	21351	10RPZ	Rotor Nut
14101	104PW	Ball Bearing	17400	10L1S	Screw	21352	10RQK	Bearing Water Proof
14171	104UJ	Handle Knob Bushing B	17404	10GR8	Washer	21354	10RQW	Main Shaft Spacer
15284	10M70	Screw	17417	10L1T	Screw	21355	10RR1	Nut Lock Plate
15848	108T1	Handle Knob I.D. Plate	17438	10LFF	Screw	21360	10RQM	Oscillating Gear
16213	10B8Q	Drag Washer Retainer	17629	10EX6	Ball Bearing	21362	10RR2	Handle Screw Cap
16214	10BCA	Key Washer	17700	10LFA	Screw	21363	10RQC	Oscillating Guide
16215	10348	Drag Washer	17939	10LLE	Screw	21368	10RQS	Bearing Water Proof
16217	10C1C	Drag Washer	18410	10EU0	Handle Knob Bushing A	21369	10RQ5	Body Seal
16220	10LU0	Bearing Bushing	18412	10LCT	Screw	21375	10RQ1	Handle Shaft Cover B
16221	10JPL	Bearing Water Proof	18843	10C6B	Washer	21376	10TKY	Rear Protector
16222	10J07	Spool Support	18845	10T7K	Handle Knob Assembly	21378	10RQX	Pinion Gear Bushing
16223	108WY	O Ring	19638	1015S	O Ring	21379	10MC2	Screw
16225	102H4	Drag Click	19719	10CG1	O Ring	21380	10PMW	Screw
16227	10A6T	Screw	19745	104FH	Washer	21381	10LWN	Bearing Retainer
16229	10700	Spool Support Washer	19750	101DP	Washer	21382	101TG	Ball Bearing
16230	103N0	Spool Support	19831	1009E	O Ring	21383	10J3V	Anti-Reverse Pawl Collar
16239	105R2	Bail Spring	21097	10LHR	Screw	21384	102WU	Anti-Reverse Pawl Cover
16240	106KQ	Bail Trip Lever	21181	100X7	Line Roller Seal	21385	10BGH	Washer
16243	10PMW	Screw	21294	10E3W	Line Roller Support Collar	21386	10PH2	Drag Click Spring
16244	10882	Bail Spring Cover	21295	10E4C	Line Roller Bushing	21389	10RR5	Spool Assembly
16246	10MNF	Bail Hold Support Guard	21296	10E43	Line Roller	21390	10RR6	Drive Gear
16247	10Q3H	Line Roller Support	21297	10E4D	Line Roller Bushing B	21391	10RJA	Side Cover Assembly
16249	108WV	O Ring	21298	10E4E	Line Roller Collar	21394	10RPY	Pinion Gear
16250	10A6U	Screw	21299	10E3S	Line Roller Plate	21470	10R22	O Ring
16251	108WW	O Ring	21314	10L9U	Screw	21653	10HEL	Click Spring
16252	10MHB	Roller Clutch Cover	21329	10RQF	Drag Knob	22183	100E4	Roller Clutch Assembly
16253	10MH2	Roller Clutch Water Proof	21331	10RJD	Drag Cover Assembly			
16254	10K7T	Rotor Ring	21333	10RJ2	Bail Assembly			
16255	108WX	O Ring	21335	10RJ0	Body Assembly			
16257	10JAA	Bearing Housing	21336	10RJ4	Main Shaft Assembly	16276	109V0	Line Band (Accessory)

Please note that the number of adjusting washers may not be the same as shown in the exploded views.
(Adjustment will vary with each individual product.)

(230904)_004