GKFA361810SQD

Solid Surface White Stone Farmhouse Double Bowl Kitchen Sink

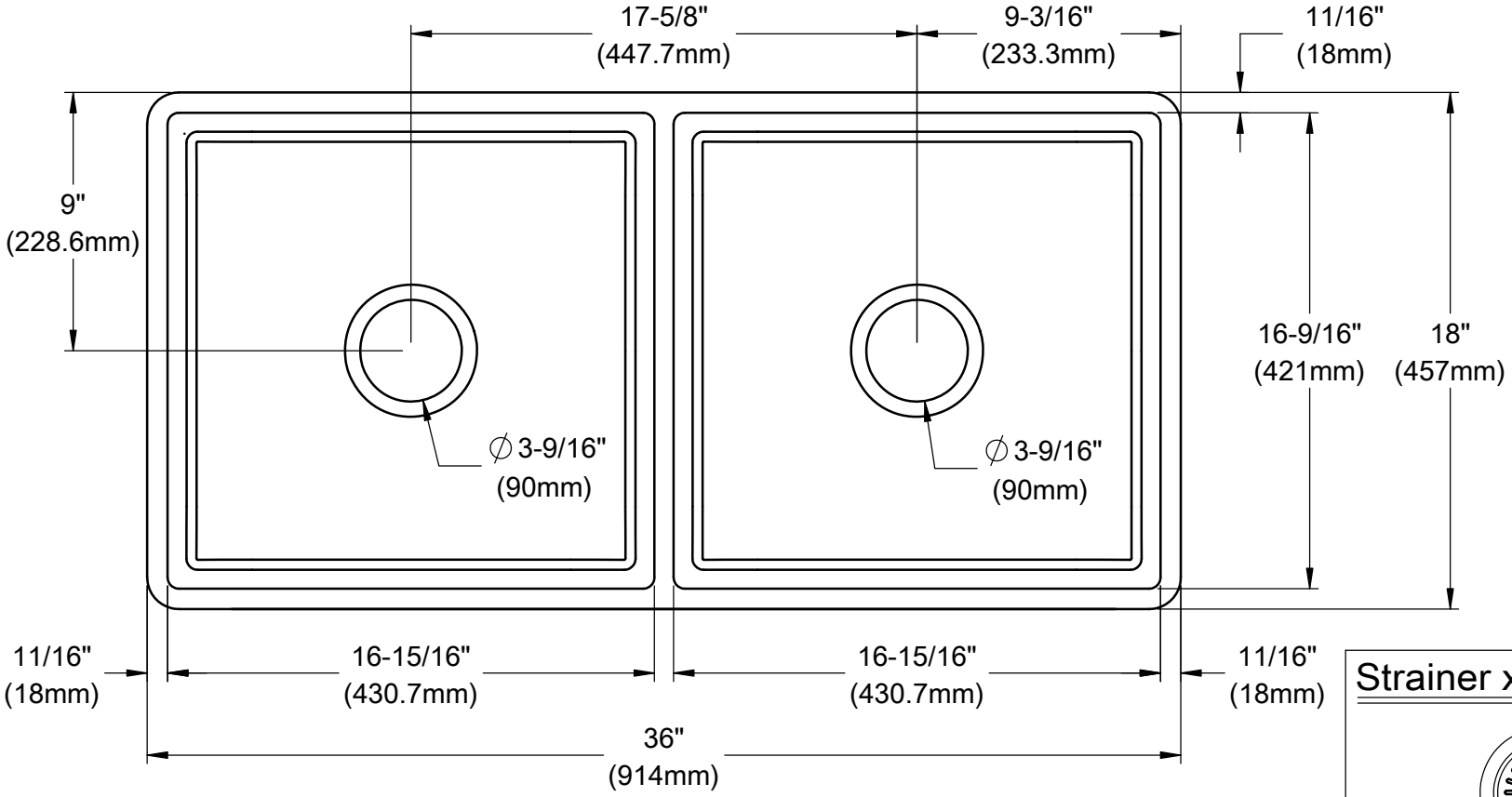

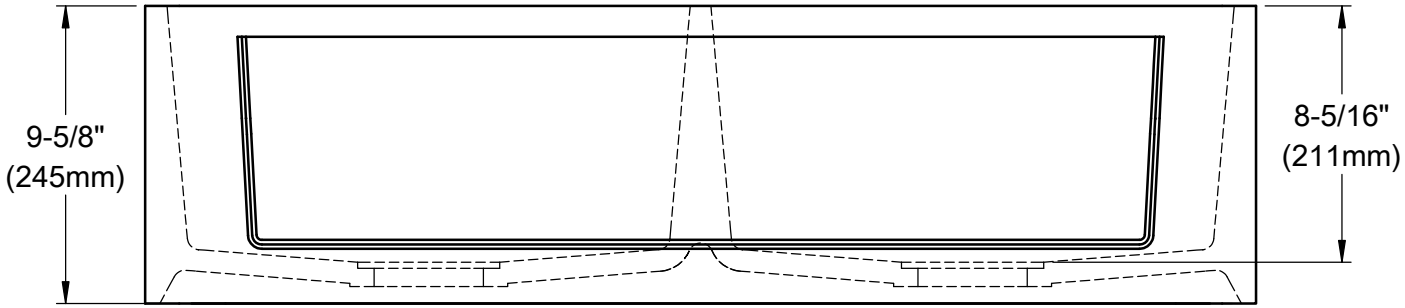

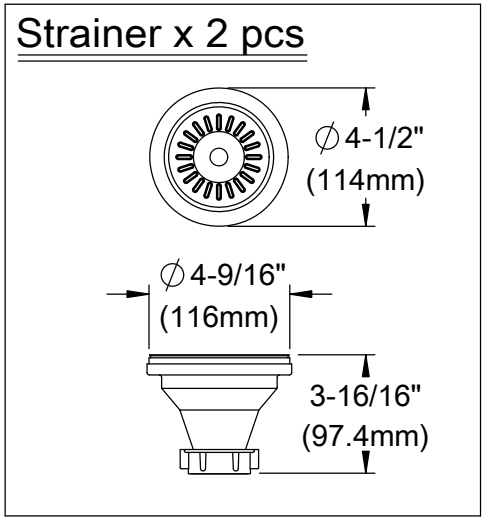

Ref# GKFA361810SQD | 2018-07-A